SERVICE BULLETIN

CHRYSLER
PLYMOUTH
DODGE

DODGE
&
FARGO
TRUCKS

NO. 1679

DATE 4-18-69

GROUP :

FUEL

HOLLEY (SIX-PAK)
3-2 BARREL
CARBURETORS

MODELS :

1969 ROAD RUNNER
AND SUPER-BEE WITH
440 C.I.D. ENGINE

This bulletin covers description, servicing procedures and specifications for the Holley (six-pak) 2300 and 2300C Series 3 - 2-bbl. carburetors used on a limited number of Road Runner and Super-Bee models equipped with 440 cubic inch engines.

(THIS BULLETIN IS SUPPLIED AS TECHNICAL INFORMATION ONLY AND IS NOT AN AUTHORIZATION FOR REPAIRS)

CHRYSLER
CANADA LTD.

GENERAL INFORMATION

Three two barrel Holley 2300 and 2300 C Series carburetors are mounted on an aluminum intake manifold and are used on the 440 cubic inch engine. Models R-4391A and R-4392A (Center) are used when the vehicle is equipped with standard and automatic transmissions respectively. The two outboard carburetors (front and rear) Models R-4393A, R-4394A are used with either the Standard or Automatic Transmissions (Fig. 1).

The two outboard carburetors contain all the usual systems except, choke, power enrichment, accelerating pump, idle, and spark advance. Each carburetor is equipped with a throttle control vacuum diaphragm (Fig. 1). The two outboard carburetors are connected to the center carburetor's slotted throttle lever by two adjustable connector rods. The slotted throttle lever of the center carburetor allows the throttle valves to open on the outboard carburetors as vacuum requires and close mechanically with the controlling center carburetor (Fig. 1).

The center (or controlling carburetor) provides for easier servicing and adjusting (Fig. 1). Each barrel has its own venturi, idle system, main metering system, booster venturi and throttle valve. The carburetor is equipped with a diaphragm type cam operated, accelerating pump, located on the bottom of the fuel bowl. The pump functions when the pump lever is activated by a cam on the throttle lever. An override spring on the pump lever adjusting screw, allows a prolonged discharge of fuel for smooth acceleration.

The supply of fuel necessary for high speed or full power operation, is delivered by a fully automatic power enrichment system. Manifold vacuum on the power valve diaphragm actuates the power enrichment system.

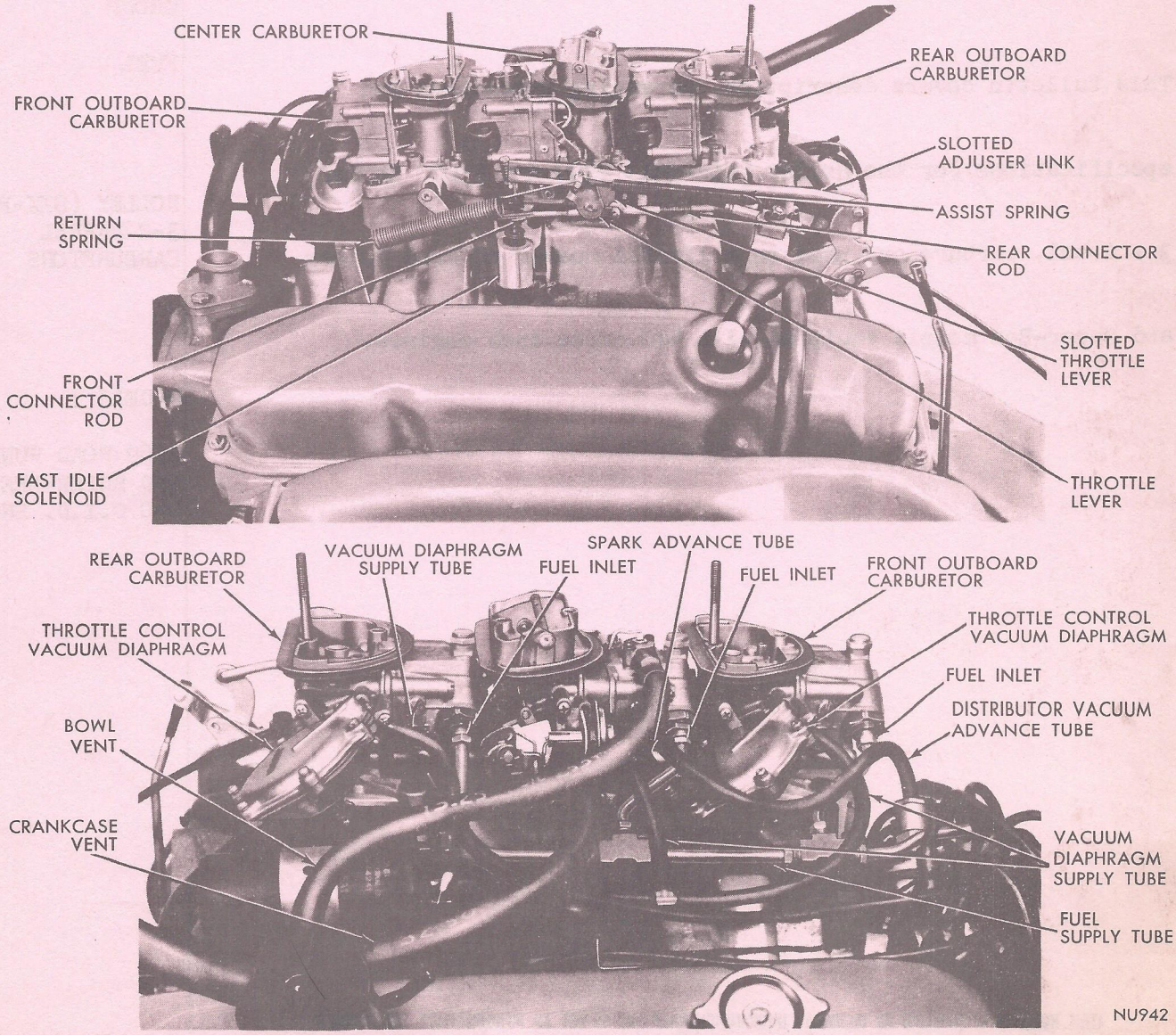

Fig. 1—6 Barrel Carburetor Installation (Tri-Carb)

The choke used only on the R-4391A and R-4392A is the well type with a thermostatic coil spring. The well is located in the intake manifold and over the exhaust crossover passage. Heat generated in the well acts on the thermostatic coil spring so that as the engine warms up, the choke valve moves toward the open position.

There are four major sub-assemblies of the center carburetors and they are; the main body assembly, the fuel bowl, the metering body assembly and the throttle body.

Operation (R-4391A and R-4392A Only)

The carburetor uses the four basic systems required for efficient carburetion. These four systems are: The idle system which provides a rich mixture for smooth idle and low speed performance; The accelerating pump system which provides additional fuel during acceleration; The main metering system which provides an economical mixture for normal cruising conditions; and the power enrichment system which provides a richer mixture when high power output is desired.

Supplementing the four systems are: The fuel inlet system which constantly supplies fuel to each basic system; and the choke system which temporarily enriches the fuel mixture to aid in starting and running a cold engine. The difference in air pressure (vacuum) within the carburetor provides the force for proper discharge of fuel for the various engine speed and load conditions.

Fuel Inlet System

All fuel first enters the fuel bowl (Fig. 2) which stores fuel for the four basic metering systems. The fuel enters the fuel bowl through the fuel inlet valve or needle and seat assembly. The amount of fuel entering the fuel bowl is determined by the space between the movable needle and its seat and also by the pressure from the fuel pump.

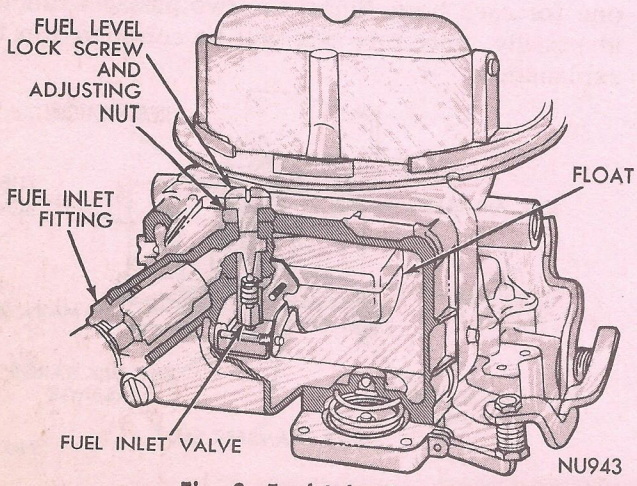

Fig. 2—Fuel Inlet System

Movement of the needle in relation to the seat is controlled by the float and hinge assembly which rises and falls with the fuel level. As the fuel level drops, the float drops, opening the needle valve to allow fuel to enter the float chamber. When the fuel reaches a specified level, the float moves the needle valve to a position where it restricts the flow of fuel, admitting only enough to replace that being used. Any slight change in the fuel level causes a corresponding movement of the float, opening or closing the fuel inlet needle valve to immediately restore or hold the proper fuel level. The fuel inlet system must constantly maintain the specified level of fuel as the basic fuel metering systems are calibrated to deliver the proper mixture only when the fuel is at this level.

A float spring is incorporated under the float to assist in minimizing float vibration. The float chamber is vented internally by the vent tube at all times.

Choke System

The choke permits a richer fuel - air mixture required for starting and operating a cold engine. Most of the vaporized fuel condenses to a liquid upon contact with the cold surfaces of intake manifold. In this liquid form it burns too slowly and incompletely in the cylinders and will cause stalling and loss of power. The choke valve is normally closed during the cranking period and partially open during warm up, confining manifold vacuum below the choke valve. This greater vacuum causes both main metering system and idle system to discharge fuel into the manifold (Fig. 3).

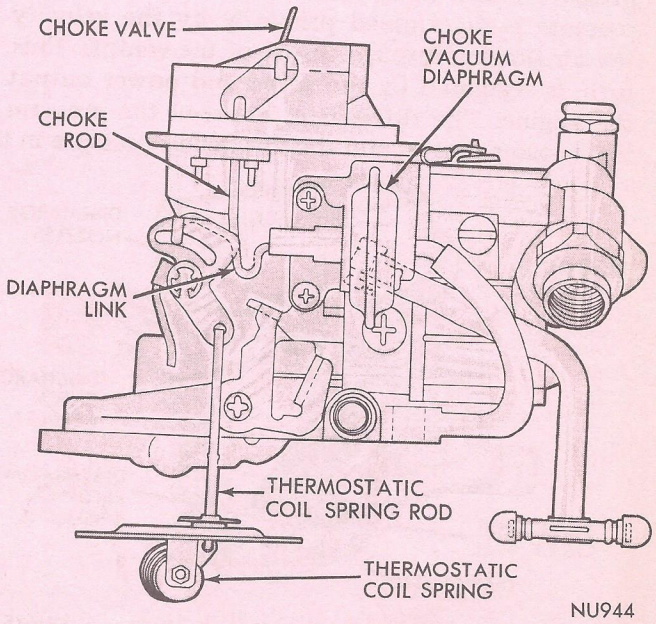

Fig. 3—Choke System

Accelerating Pump System

As the throttle opening is increased, the air flow through the carburetor responds almost immediately. The fuel, however, is heavier than air and there is a brief interval before the fuel flow responds. It is during this interval that the accelerating pump operates, supplying fuel until the other metering systems can provide the proper mixture.

The accelerating pump (Fig. 4) is located in the bottom of the fuel bowl. The pump begins to function when the pump operating lever is actuated by throttle movement. When the throttle is opened the pump linkage, actuated by a cam on the throttle shaft lever, forces the pump diaphragm up. As the diaphragm moves up, the pressure forces the pump inlet check ball on its seat preventing fuel from flowing back into the float chamber. The fuel flows from the short horizontal passage in the fuel bowl into the long diagonal passage in the metering body. The fuel passes into the main body and then in the pump discharge chamber. The pressure of the fuel causes the discharge needle to raise and fuel is discharged into the venturi.

As the throttle is moved toward the closed position, the linkage returns to its original position and the diaphragm spring forces the diaphragm down. As the diaphragm returns to its original position the pump inlet check ball is moved off its seat and the diaphragm chamber is filled with fuel from the bowl.

Main Metering System

When the engine is running, it draws air through the carburetor venturi and booster venturi. The air passing through the throat of a venturi, creates a low pressure called a vacuum. The strength of this low pressure is determined primarily by the velocity of the air flowing through throat of the venturi. This, in turn, is regulated by the speed and power output of the engine. The difference, between the pressure in the booster venturi and the normal air pressure in the

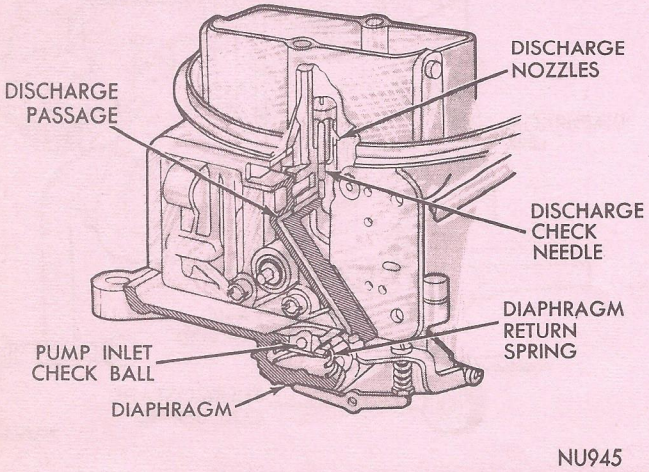

Fig. 4—Accelerating Pump System

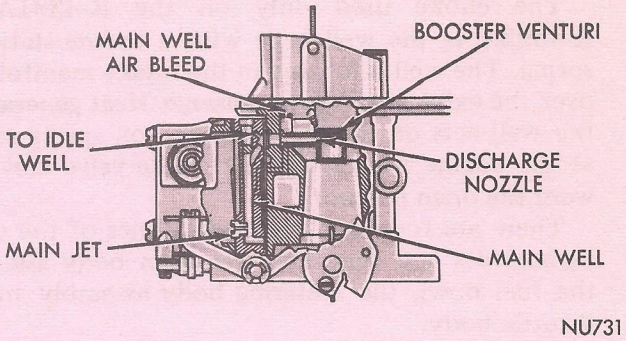

Fig. 5—Main Metering System

float chamber, causes fuel to flow through the main metering system (Fig. 5).

At cruising speed, the fuel flows from the float chamber through the main jet, which measures or meters the fuel flow, into the bottom of the main well. The fuel moves up the main well past the main well air bleed hole in the side of the well. Filtered air, enters through the air bleed in the main body and then into the main metering body by interconnecting passages. This mixture of fuel and air, being lighter than raw fuel, responds faster to any change in venturi vacuum and vaporizes more readily when discharged into the air stream of the venturi. The mixture of fuel and air moves up the main metering passage and passes into the short horizontal passage leading to the main body, then through the horizontal channel of the discharge nozzle.

Idle System

At idle and low speeds, the air flow through the carburetor is not sufficiently strong enough to draw fuel through the venturi for the main metering system. Intake manifold vacuum is high because of the greater restriction to the air flow by the nearly closed throttle valves. This high manifold vacuum is used to provide the pressure differential to operate the idle system (Fig. 6).

The carburetor utilizes two identical idle systems, one for each bore. Since, the two passages function identically, only one side will be considered in this explanation.

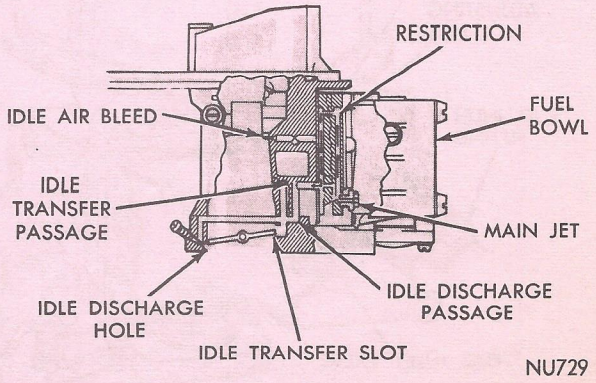

Fig. 6—Idle System

At idle, the normal air pressure in the float chamber causes the fuel to flow through the idle system to the greatly reduced pressure area below throttle valve. Fuel flows from the float chamber through the main jet then into the small angular but horizontal passage that leads across to a vertical passage.

The fuel flows up this vertical passage, (idle well) past the idle feed restriction and then it is mixed with air coming in from the idle air bleed. This fuel-air mixture flows through a short horizontal passage and then down another vertical passage. At the bottom of this vertical passage the fuel-air mixture branches in two directions, one through the idle discharge passage and the other to the idle transfer passage.

The fuel in the idle discharge passage flows through a short passage, down another passage in the main body and into the throttle bore below the throttle valve.

During off-idle operation when the throttle valve is moved slightly, the fuel flows through the idle transfer passage from the metering body into the throttle body passage. As the idle transfer slot is exposed to manifold vacuum, fuel is discharged into the throttle bore.

As the throttle valve is opened still wider and engine speed increases, the air flow through the carburetor is also increased. This creates an increased vacuum in the venturi to bring the main metering system into operation. The flow from the idle system tapers off as the main metering system begins discharging fuel. The two systems are engineered to provide smooth gradual transition from idle to cruising speeds.

This fuel is discharged into the booster venturi and then in the air stream of the carburetor venturi.

The throttle valve controls the amount of fuel-air mixture admitted to the intake manifold, regulating the speed and power output of the engine in accordance with accelerator pedal movement.

Power Enrichment System

During high speed (or low manifold vacuum) the carburetor must provide a mixture richer than is needed when the engine is running at cruising speed under no great power requirements. The added fuel for power operation is supplied by the power enrichment system (Fig. 7).

This system is controlled by manifold vacuum which gives an accurate indication of the power demands placed upon the engine. Manifold vacuum is strongest at idle and decreases as the load on the engine increases. As the load on the engine is increased, the throttle valve must be opened wider to maintain a given speed. Manifold vacuum is thus reduced because the opened throttle valve offers less restriction to air entering the intake manifold.

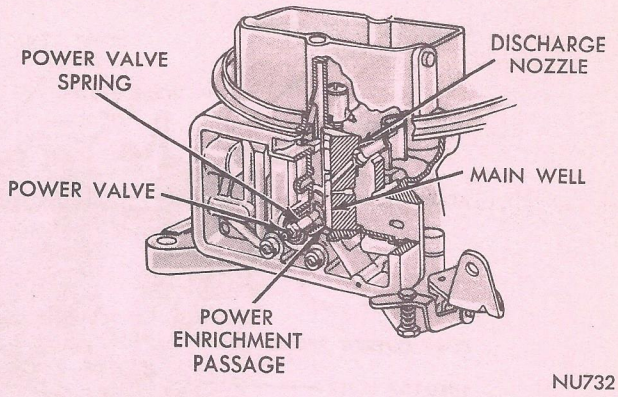

Fig. 7—Power Enrichment System

A vacuum passage in the throttle body transmits manifold vacuum to the power valve chamber in the main body. The power valve which is located in the main metering body is affected by this manifold vacuum. The manifold vacuum, acting on the diaphragm at idle or normal load conditions, is strong enough to hold the diaphragm closed, and overcomes the tension of the power valve spring. When high power demands, place a greater load on the engine and manifold vacuum drops below a predetermined point, the power valve spring overcomes the reduced vacuum opening the power valve. Fuel flows from the float chamber, through the valve and out the small holes in the side of the valve through the diagonal restrictions in the main metering body and then into the main well. Here the fuel joins the fuel flow in the main metering system, enriching the mixture.

As engine power demands are reduced, manifold vacuum increases. The increased vacuum acts on the diaphragm, overcoming the tension of the power valve spring. This closes the power valve and shuts off the added supply of fuel which is no longer required.

Spark Advance

The carburetor is teamed with the distributor to effect spark timing that will satisfy all engine speed and load conditions.

The spark must be advanced as the engine speed is increased since a definite time is required for the fuel-air mixture to burn and reach its maximum pressure at the right time for highest efficiency of the engine cycle. Because the fuel-air mixture induced into the intake manifold at light loads is not as dense as that during high load operation, it burns more slowly, hence the spark under these conditions must also be advanced.

DISASSEMBLING CARBURETOR (Center Unit)

To disassemble the carburetor (Figs. 1, 2 or 3) for cleaning or overhaul, proceed as follows:

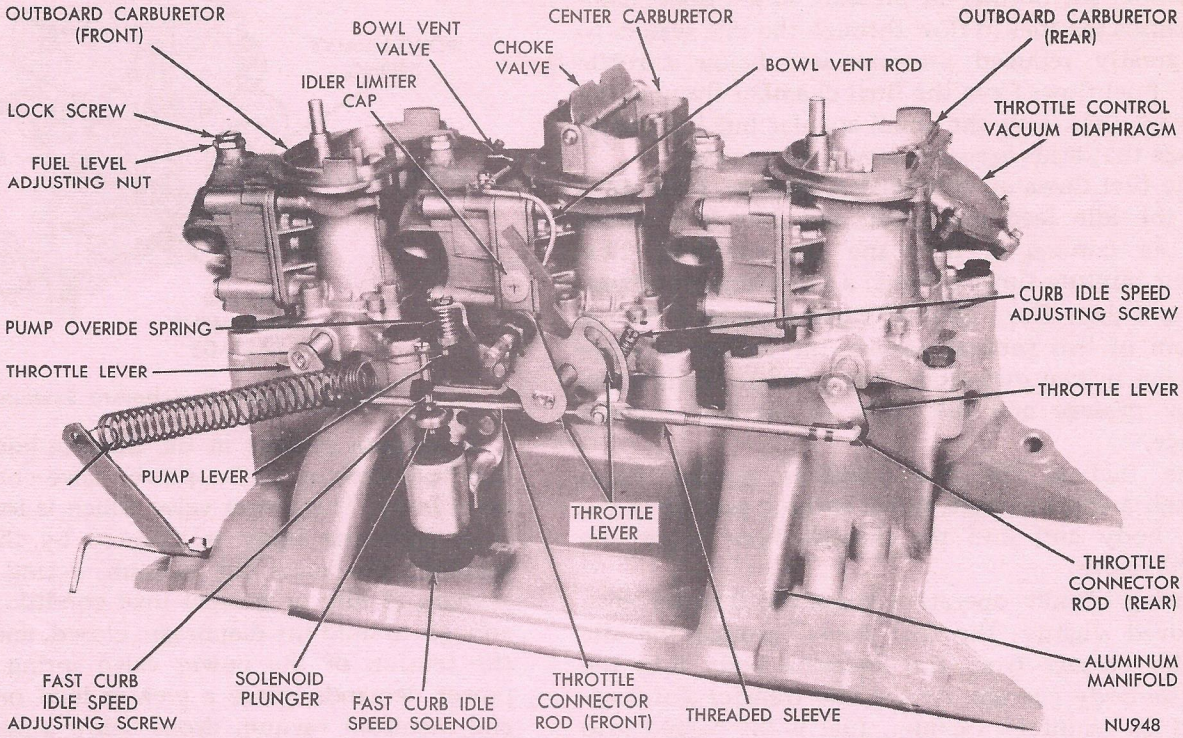

Fig. 1—Tri Carburetor Installation

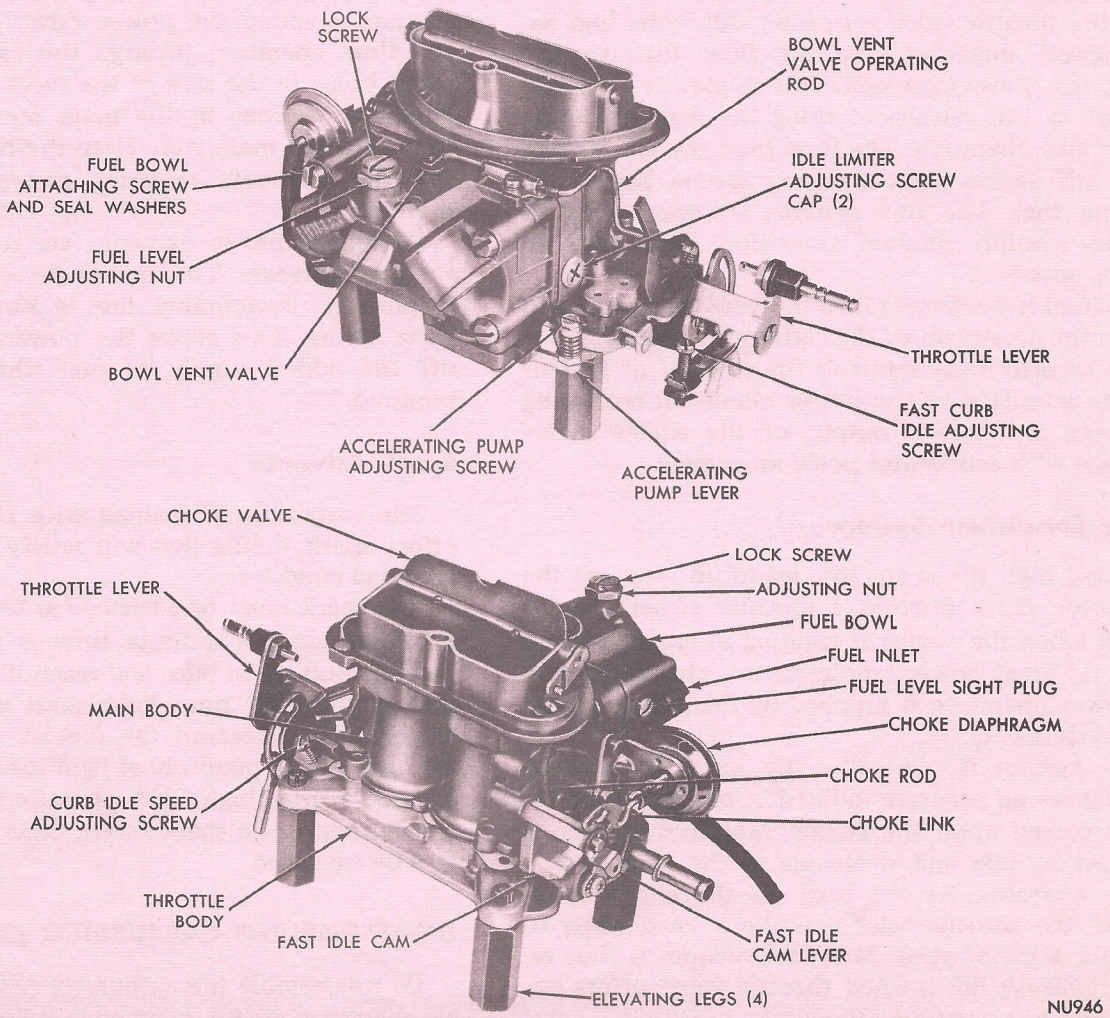

Fig. 2—Carburetor Assembly (Center Unit)

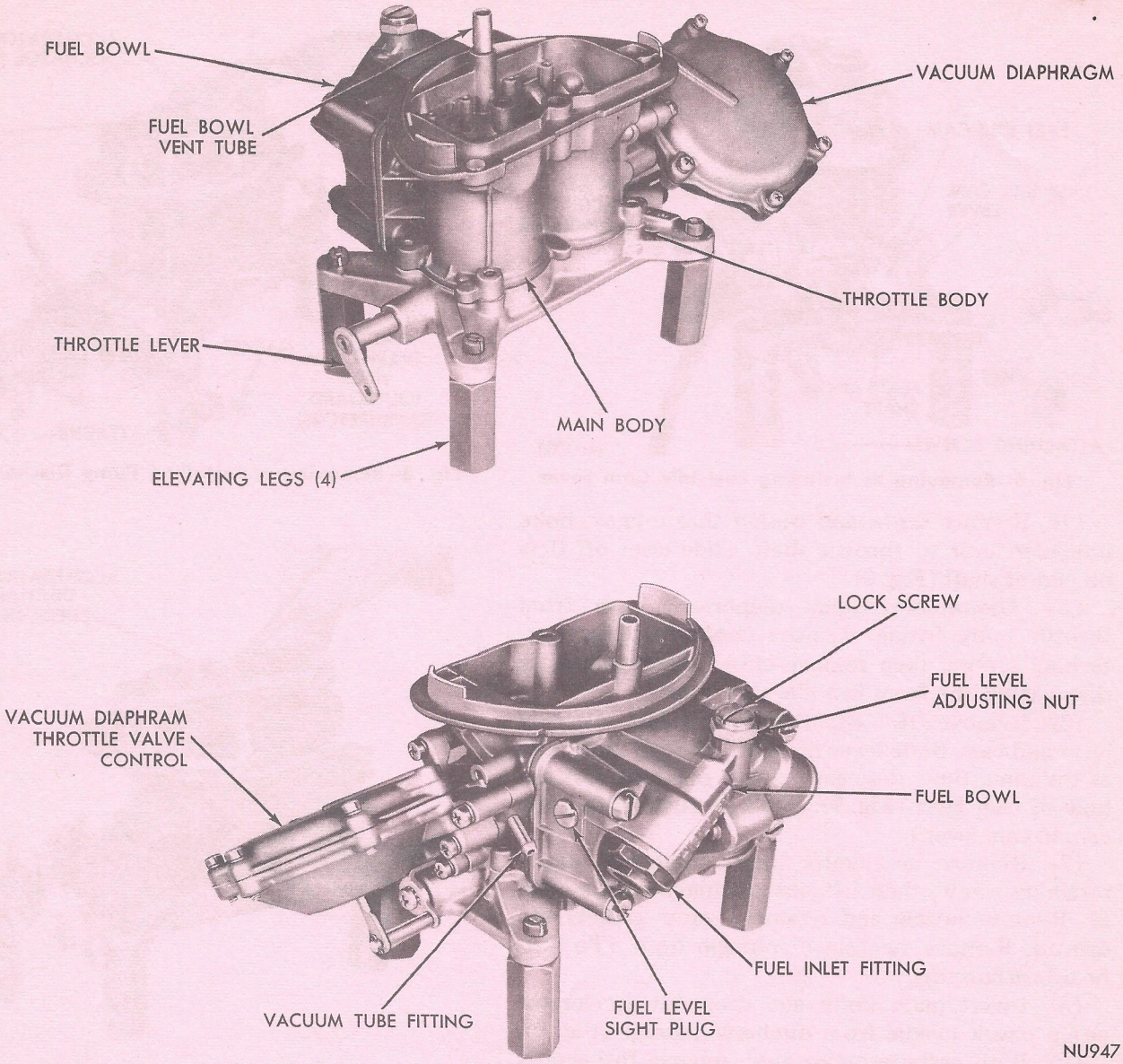

Fig. 3—Carburetor Assembly (Outboard) Front or Rear

(1) Install four elevating legs Tool T109-287S in mounting flange holes in throttle body, or use Carburetor stand C-3886. (These tools are used to protect the throttle valves from damage and to provide a suitable base for working.)

(2) Remove screws and seal washers that attach fuel bowl and metering body to main body. Remove fuel bowl (Fig. 4). Discard screw seal washers.

(3) Remove metering body, then discard gaskets (Fig. 5).

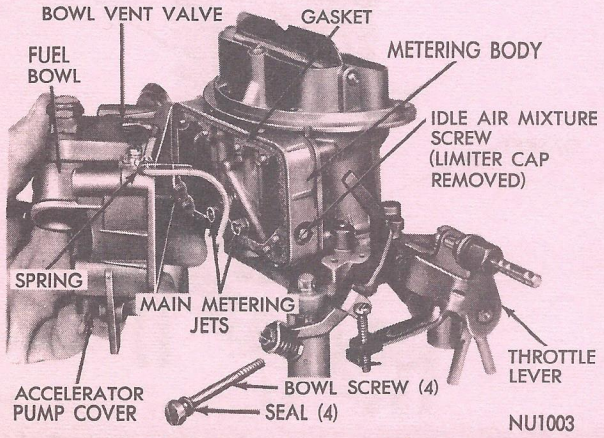

Fig. 4—Removing or Installing Fuel Bowl

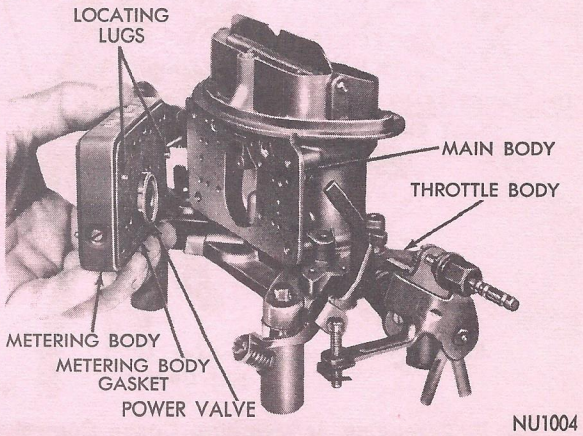

Fig. 5—Removing or Installing Metering Body

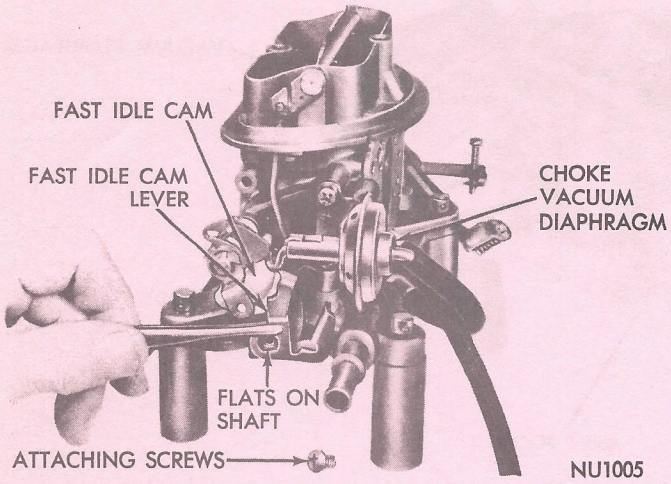

Fig. 6—Removing or Installing Fast Idle Cam Lever

(4) Remove screw and washer that retains choke unloader lever to throttle shaft. Slide lever off flats on end of shaft (Fig. 6).

(5) Disconnect choke diaphragm hose from throttle body fitting. Remove choke diaphragm attaching screws, then remove choke diaphragm after disengaging link from fast idle cam lever.

(6) Remove "E" clip that retains fast idle cam lever and cam. Slide lever and cam off stub shaft, and at the same time, disengage choke rod from bottom hole of cam lever (Fig. 7). (Note position of fast idle cam in cam lever.)

(7) Remove accelerator pump discharge nozzle retaining screw, then lift out discharge nozzle (Fig. 8). Remove nozzle and retaining screw gaskets and discard. Remove vacuum diaphragm hose. (To outboard carburetors.)

(8) Invert main body and drop out accelerator pump check needle from discharge passage (Fig. 9).

(9) With carburetor inverted, remove five screws that attach throttle body to main body (Fig. 10). Remove throttle body and discard gasket.

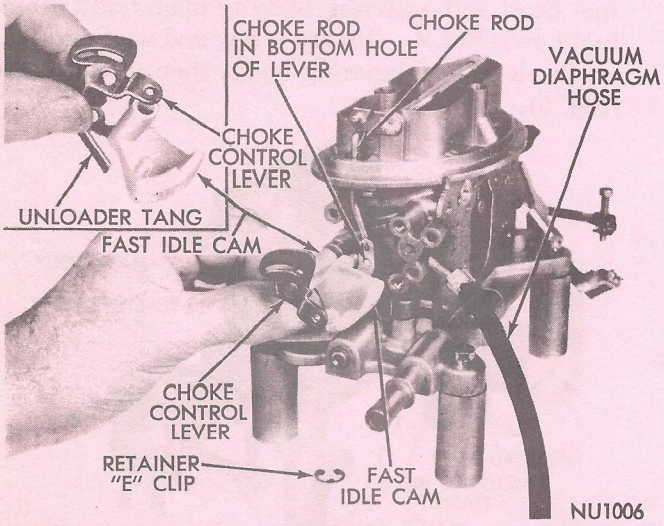

Fig. 7—Removing or Installing Choke Control Lever and Fast Idle Cam

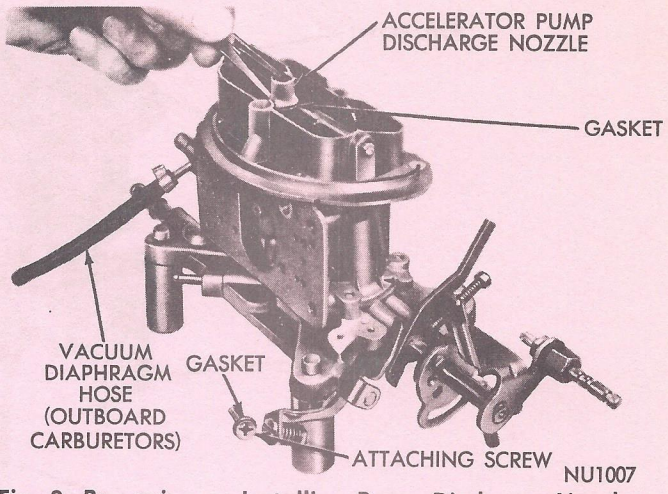

Fig. 8—Removing or Installing Pump Discharge Nozzle

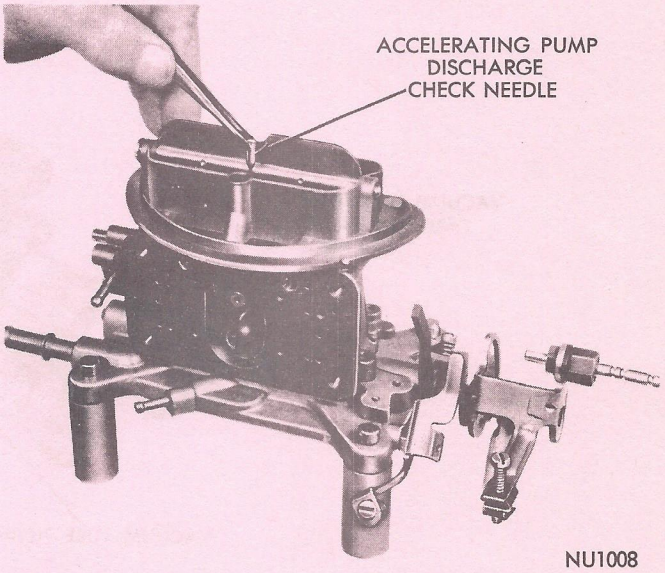

Fig. 9—Removing or Installing Pump Discharge Check Needle

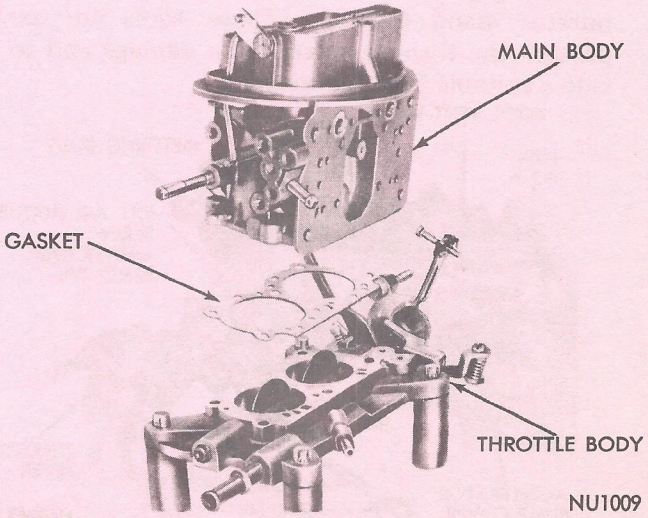

Fig. 10—Removing or Installing Main Body

Disassembling Fuel Bowl

(1) Remove screw that retains bowl vent valve, plate, spring and rod to fuel bowl (Fig. 11). Remove bowl vent valve assembly.

(2) Remove fuel level adjusting nut lock screw, then remove adjusting nut. Slide needle valve and seat out of fuel bowl (Fig. 12). Discard needle seat "O" ring.

(3) Remove screws that attach float lever bracket to fuel bowl. Remove float, spring and fulcrum pin from fuel bowl (Fig. 13).

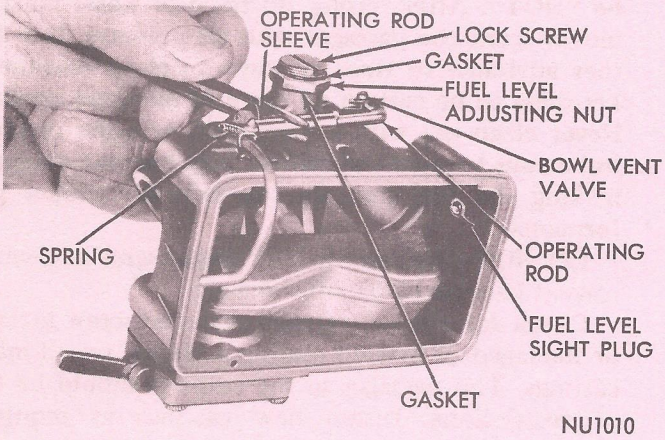

Fig. 11—Removing or Installing Bowl Vent Valve

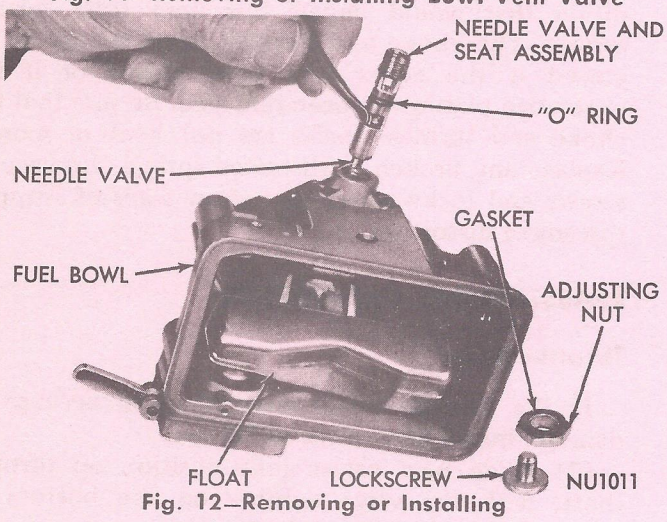

Fig. 12—Removing or Installing Fuel Inlet Needle and Seat

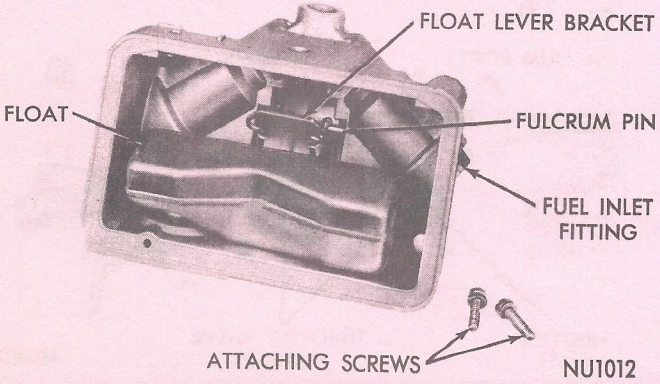

Fig. 13—Removing Float Assembly

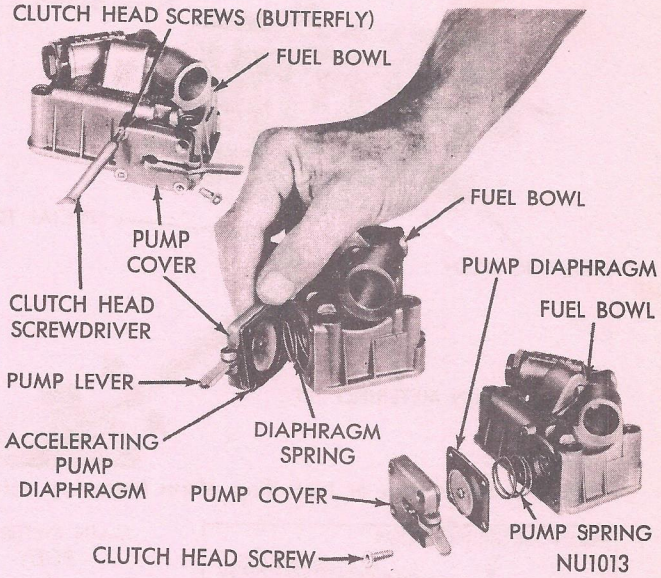

Fig. 14—Removing or Installing Accelerating Pump Assembly

(4) Remove sight plug and gasket from bowl. Discard gasket.

(5) Using special clutch head screwdriver Tool CL-13, remove screws that attach accelerating pump cover. Remove cover, then carefully remove diaphragm and return spring (Fig. 14).

(6) Remove fuel inlet fitting and discard gasket.

Disassembling Main Metering Body

(1) Using Tool C-3747, remove power valve assembly from metering body (Fig. 15).

(2) Using Tool C-3748, remove main metering jets (Fig. 16).

(3) Using a suitable tool, pry plastic limiter caps off the two idle air mixture screws. Remove screws and gaskets. (Be sure and count the number of turns to seat screws, as the same number of turns from the seat must be maintained at installation) (Fig. 17).

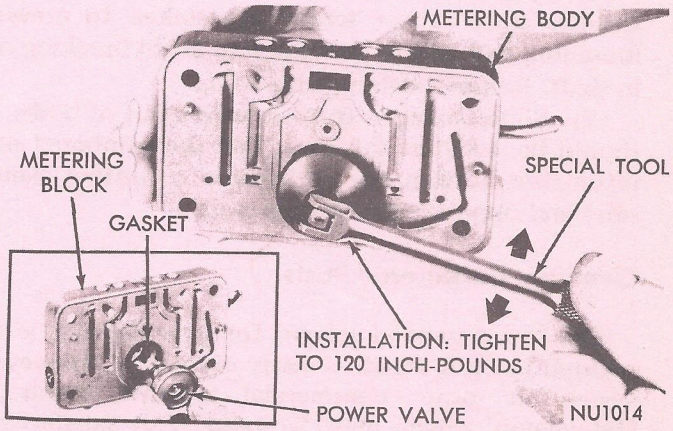

Fig. 15—Removing or Installing Power Valve

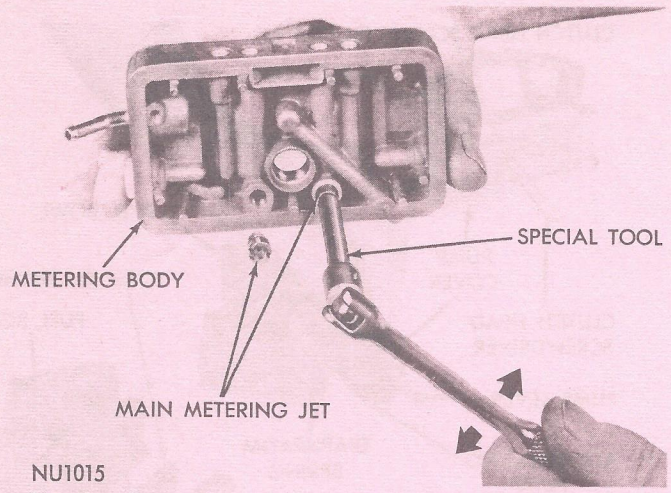

Fig. 16—Removing or Installing Main Metering Jets

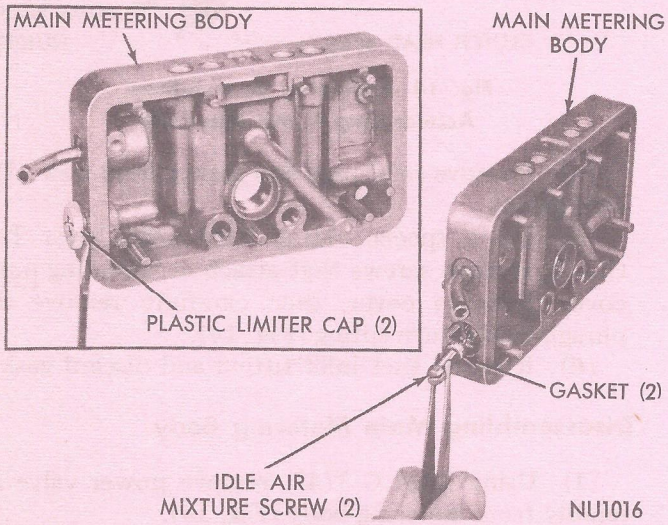

Fig. 17—Removing Idle Air Mixture Screws and Gaskets

Disassembling Throttle Body

Caution: In normal routine cleaning and overhaul of the carburetor, do not remove throttle valves unless they are nicked or damaged. If necessary to remove, proceed as follows:

(1) Remove screws that hold throttle valves to throttle shaft. **These screws are staked to prevent loosening and care is necessary to avoid breaking off in shaft. Remove staking with a file.**

(2) Slide damaged throttle valves out of bores. It should be noted at this time, that the numbered side is on the bottom (or carburetor mounting flange side) and opposite the vacuum port.

Cleaning Carburetor Parts

The recommended solvent for gum deposits is denatured alcohol which is easily obtainable. However, there are other commercial solvents, (such as Metalclene) which may be used with satisfactory results.

The choke diaphragm can be damaged by solvents. Avoid placing the diaphragm assembly in ANY liquid. Clean the external surfaces with a clean cloth or soft wire brush. Shake dirt or other foreign material from the stem side of the diaphragm. Depressing the diaphragm stem to retracted position, will provide an additional hole for the removal of dirt. Compressed air can be used to remove loose dirt, **but should not be connected to the vacuum inlet fitting.**

IMPORTANT: If the commercial solvent or cleaner recommends the use of water as a rinse, it should be "HOT". After rinsing, all trace of water must be blown from the passages with air pressure. It is further advisable to rinse all parts in clean gasoline or kerosene to be certain no trace of moisture remains. Never clean jets with a wire, drill, or other mechanical means because the orifices may become enlarged, making the fuel mixture too rich for proper performance.

DO NOT clean any rubber diaphragms in cleaning solvent because of possible damage.

Check for cracks, warpage, stripped screw threads, or damaged or marred mating surfaces, on all major castings. The passages in the castings should be free of restrictions. Install new castings as required. Check the float assembly for damage or any condition that would impair this item from further service. The choke and throttle valves should be replaced if the edges have been nicked or if the protective plating has been removed. Be sure that the choke and throttle shafts are not bent or scored. Replace any broken or distorted springs. Replace all screws and lockwashers that show signs of stripped threads or distortion.

REASSEMBLING CARBURETOR

Throttle Body

If the throttle valves were removed because of damage, install new valves as follows:

(1) Slide new valves into position on throttle shaft, with the valve number on the bottom or mounting flange side, and away from vacuum port (Fig. 18).

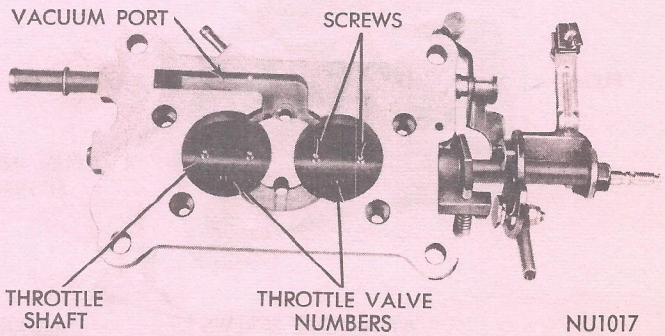

Fig. 18—Throttle Valves Installed

(2) Install new valve screws but do not tighten.

(3) Hold valves in place with fingers. (Fingers pressing on high side of valves.)

(4) Tap valves lightly with a screwdriver to center in bores. Now, tighten valve attaching screws securely. Operate the throttle shaft. From closed to open position, they must operate smoothly without drag or sticking. Hold throttle body up to a strong light. The light which is visible around outer diameter of valves in bores should be uniform. Stake screws, using a pair of pliers.

Assembling Main Metering Body

(1) Install main metering jets (No. 63) in metering body, using Tool C-3747. Tighten securely (Fig. 16).

(2) Slide a new gasket over power valve and install in body. Using Tool C-3748, Tighten to 120 inch pounds (Fig. 15).

(3) Press a new gasket in each of the idle air mixture ports, then thread idle air mixture screws through gasket and into body, using a small screwdriver. Lightly seat screws, then back off number of turns (from seat) counted at disassembly (Fig. 19).

Before installing screws, be sure the tapered portion is grooved or ridged, a new idle air mixture screw must be installed to insure having correct idle mixture control.

(4) Install new plastic caps over idle screws, with tabs on caps against stops in bore (Fig. 19).

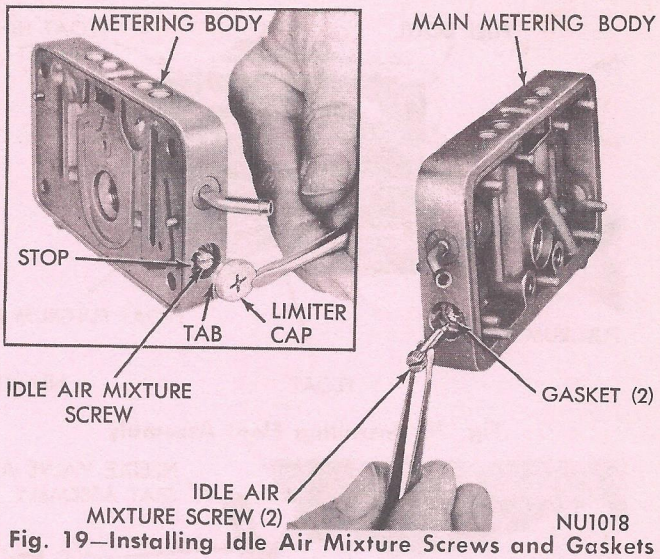

Fig. 19—Installing Idle Air Mixture Screws and Gaskets

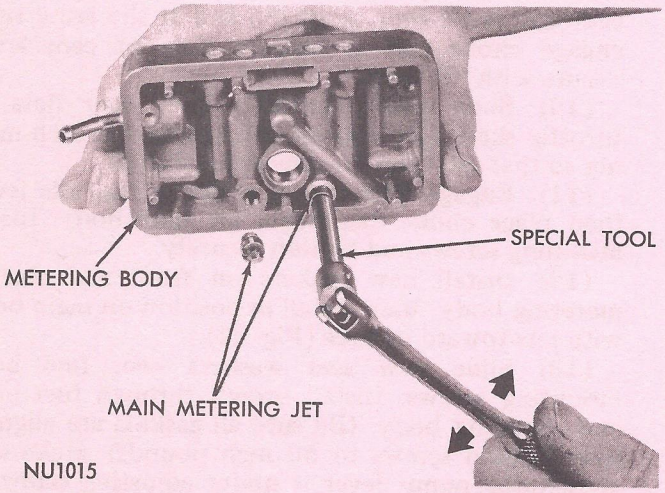

Fig. 16—Removing or Installing Main Metering Jets

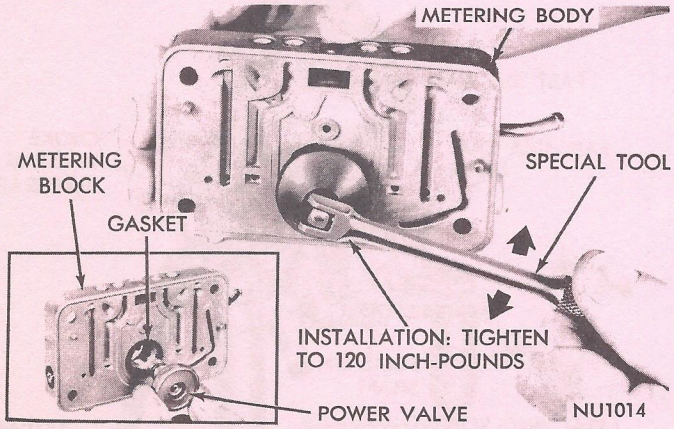

Fig. 15—Removing or Installing Power Valve

Reassembling Fuel Bowl

(1) Place a new gasket over fuel inlet fitting, then install fitting in fuel bowl. Tighten securely.

(2) Install accelerator pump spring in position in fuel bowl, followed by diaphragm and pump cover. (When installing diaphragm, be sure contact button rivet head is toward pump lever in cover (Fig. 14). Install clutch head screws and tighten securely, using Tool CL-13.

(3) Install sight plug and new gasket in bowl.

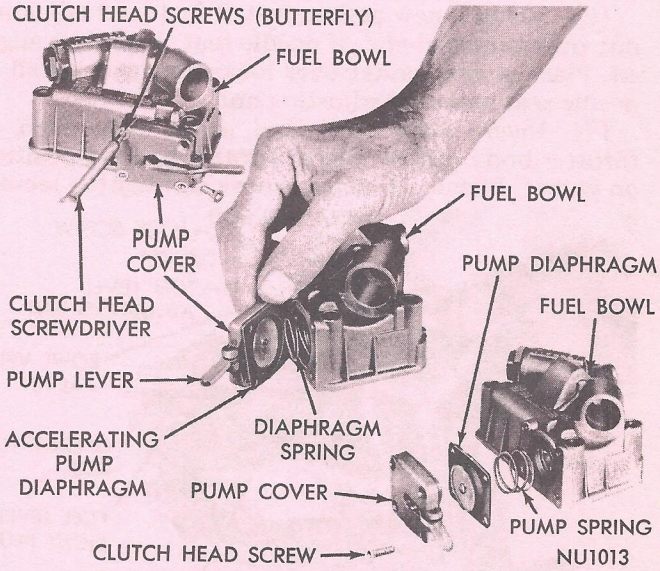

Fig. 14—Removing or Installing Accelerating Pump Assembly

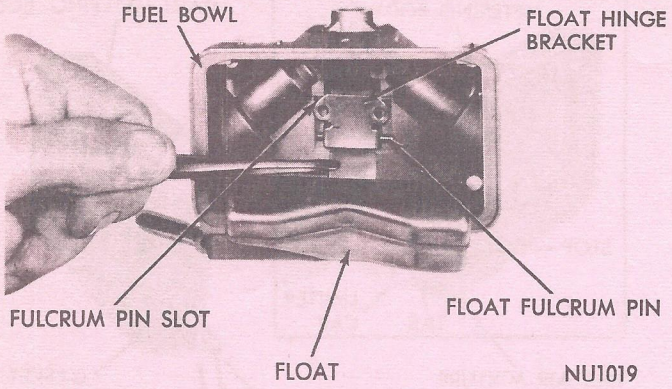

Fig. 20—Installing Float Assembly

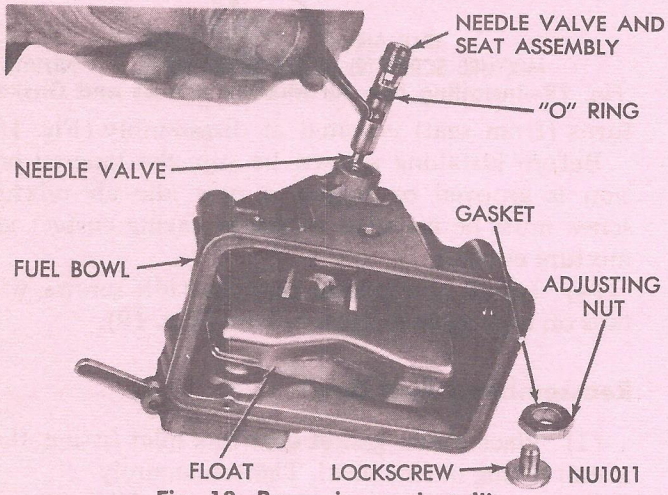

Fig. 12—Removing or Installing Fuel Inlet Needle and Seat

(4) Slide float and hinge bracket in position in bowl, with fulcrum pin seated in slot. Install attaching screws and tighten securely (Fig. 20).

(5) Coat a new "O" ring with vasoline and slide over fuel inlet needle seat and down into position. Install needle and seat in fuel bowl (Fig. 12).

(6) Using a new gasket, install fuel level adjusting nut over threaded end of needle seat, with flats aligned. Place a new gasket over lockscrew and install in needle seat and over adjusting nut.

(7) Invert main body and install new main to throttle body gasket. Place throttle body in position on gasket. Install attaching screws and tighten securely.

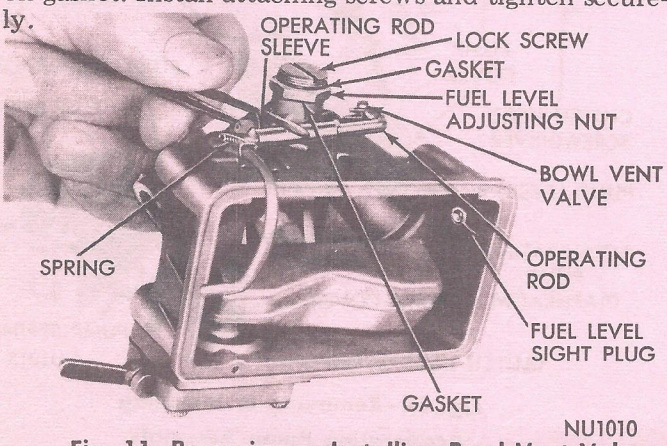

Fig. 11—Removing or Installing Bowl Vent Valve

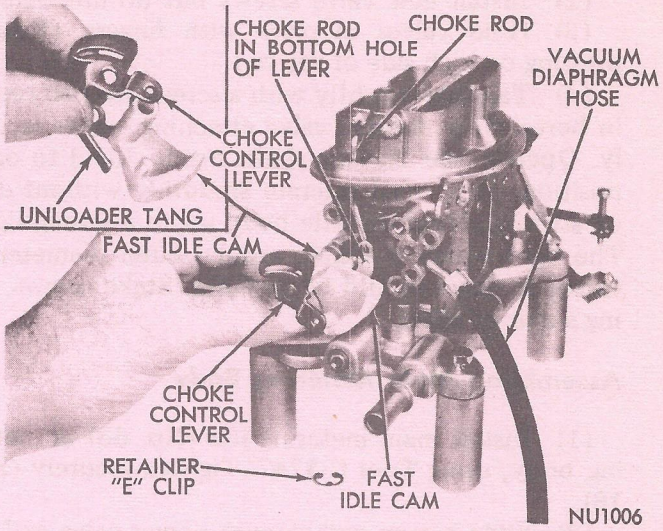

Fig. 7—Removing or Installing Choke Control Lever and Fast Idle Cam

(8) Install bowl vent valve on fuel bowl. Install attaching screw and tighten securely. (Be sure spring short loop enters hole in plate from underneath and long end hooked under rod (Fig. 11).

(9) Engage fast idle cam with fast idle cam lever. Be sure cam steps are toward lever side (Fig. 7). Slide cam and lever over pivot pin and at the same time, engage choke rod in bottom hole of cam lever. Secure with "E" clip.

(10) Slide choke unloader lever over flats on throttle shaft. (Be sure lever is installed in such manner so that tab rides on cam steps (Fig. 6).

(11) Engage choke link in slot in fast idle lever, then place choke diaphragm on main body. Install attaching screws and tighten securely.

(12) Install new gaskets on front and rear of metering body, then install in position on main body with jets toward outside (Fig. 21).

(13) Slide new seal washers over fuel bowl mounting screws. Install screws through fuel bowl and metering body. (Be sure all gaskets are aligned, then tighten screws to 50 inch pounds). Make sure accelerator pump lever is under adjusting screw of accelerating pump operating lever.

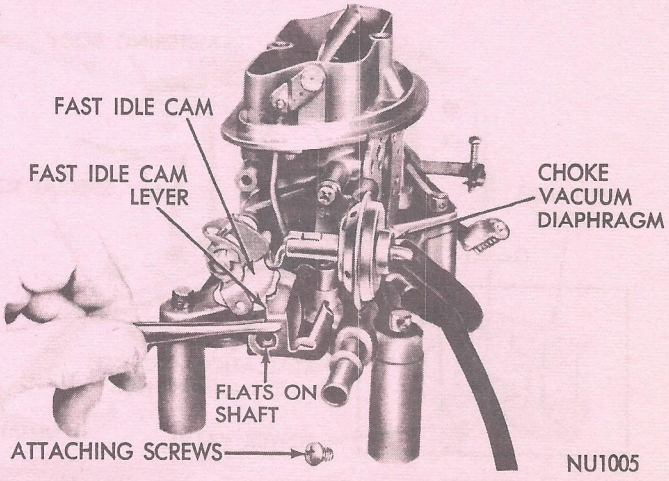

Fig. 6—Removing or Installing Fast Idle Cam Lever

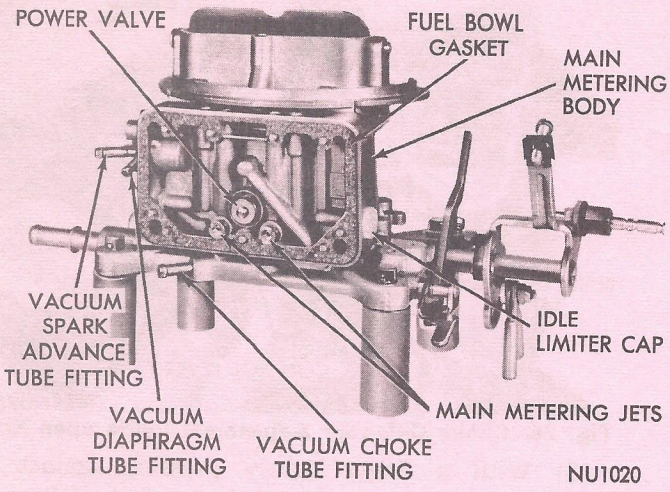

Fig. 21—Metering Body Installed

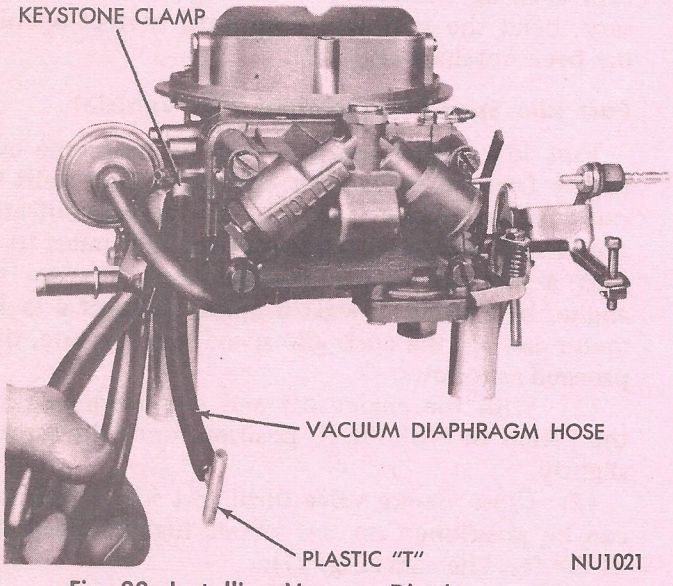

Fig. 22—Installing Vacuum Diaphragm Hose

(14) Install new keystone clamp over vacuum diaphragm hose (with tee for outboard carburetors), then slide hose over tube fitting (Fig. 22). Clamp with keystone pliers.

Carburetor Adjustments

It is very important that the following adjustments be made on a reconditioned carburetor:

Qualifying the Choke Control Lever
Choke Unloader Adjustment (wide open kick)
Fast Idle Cam Position Adjustment
Vacuum Kick Adjustment (on or off vehicle)
Fast Idle Speed Adjustment (on the vehicle)
Checking the Bowl Vent Valve Clearance
Checking the Pump Lever Clearance
Idle Speed Adjustment (curb Idle)
Adjusting the Float
Outboard Carburetor Throttle Rod Adjustment
Checking Wet Fuel Level

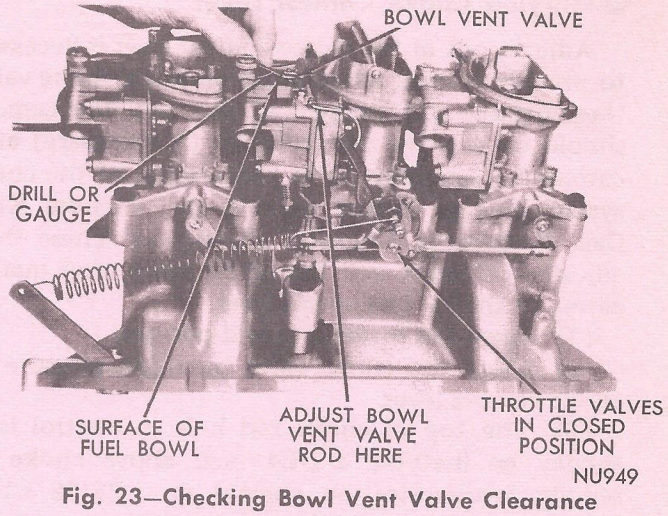

Fig. 23—Checking Bowl Vent Valve Clearance

Checking the Bowl Vent Valve Clearance

To check the bowl vent valve clearance (Fig. 23), proceed as follows:

(1) With throttle valves at curb idle, it should be possible to insert a 1/16 inch drill shank between bowl vent valve and top of primary fuel bowl, with the idle speed properly set.

(2) If an adjustment is necessary, bend rod to change arc of contact wth throttle lever, using Tool T109-213 until correct clearance has been obtained.

Checking Accelerator Pump Lever Clearance

To check accelerator pump lever clearance (Fig. 24), proceed as follows:

(1) With throttle valves wide open, and the pump lever held down, it should be possible to insert a .015 inch (min.) .0625 (max.) gauge between adjusting nut and lever.

(2) If an adjustment is necessary, bend rod to change arc of contact with throttle lever, using Tool T109-213 until correct clearance has been obtained.

(3) There must be no free movement of pump leverage when throttle is at curb idle.

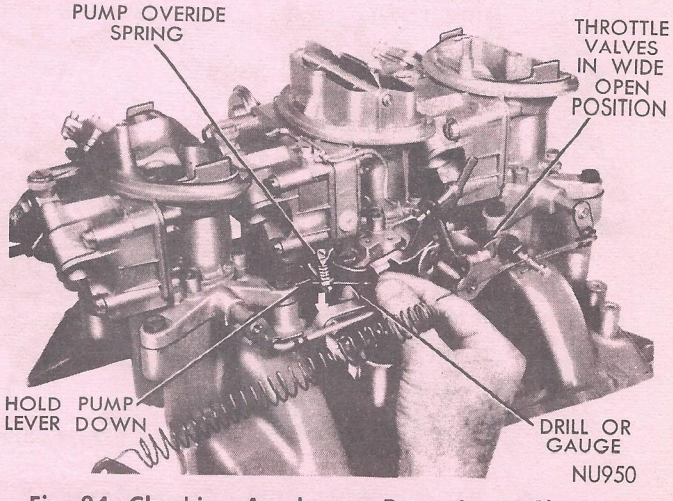

Fig. 24—Checking Accelerator Pump Lever Clearance

Qualifying Choke Control Lever

Adjustment of the choke control lever is necessary to provide correct relationship between choke valve, thermostatic coil spring and the fast idle cam. It should be checked and adjusted (if necessary) after carburetor assembly or as preparation of the choke system linkage before making the Vacuum Kick, Cam Position or Unloader adjustment. These three adjustments must and should be made after qualification of the choke control lever.

(1) Open the throttle to mid-position.

(2) Close the choke valve by slight pressure on choke control lever.

(3) The top of choke rod hole in control lever should be 3-49/64" ± 1/64 inch above choke assembly (carburetor on engine) or 1-23/32 ± 1/64 inch above carburetor base (carburetor on bench) (Fig. 25).

(4) Adjust if necessary by bending choke shaft rod at point indicated.

CAUTION: Improper bending will cause binding of rod. Test for free movement between open and closed choke positions and rebend if necessary to eliminate any interferences.

Choke Unloader Adjustment (wide open kick)

The choke unloader is a mechanical device to partially open the choke at wide open throttle. It is used to eliminate choke enrichment during cranking of an engine. Engines which have been flooded or stalled by excessive choke enrichment can be cleared by use of the unloader. Adjust the system as follows:

(1) Qualify the choke control lever, if necessary. (See Qualifying Choke Control Lever Paragraph).

(2) Hold the throttle valves in the wide open position. Insert the specified drill between the upper edge of the choke valve and the inner wall of the air horn (see specifications).

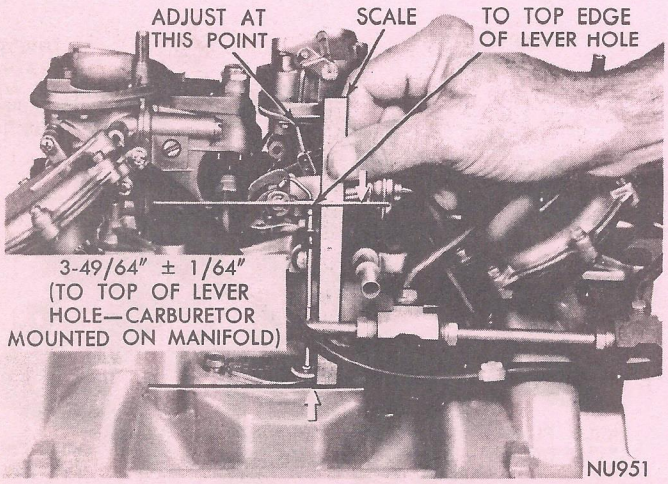

Fig. 25—Qualifying Choke Control Lever

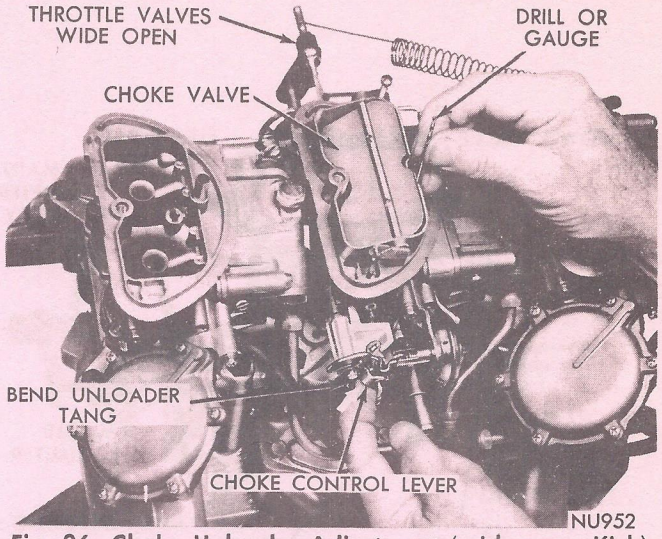

Fig. 26—Choke Unloader Adjustment (wide open Kick)

(3) With a finger lightly pressing against the choke control lever, a slight drag should be felt as the drill is being withdrawn. If an adjustment is necessary, bend the indicated tang until correct opening has been obtained (Fig. 26).

Fast Idle Speed Adjustment (On Vehicle)

Fast idle engine speed is used to overcome cold engine friction, stalls after cold starts and stalls because of carburetor icing. Set this adjustment after the vehicle odometer indicates over 500 miles to insure a normal engine friction level. Prepare the engine by driving at least 5 miles. Connect a tachometer and set the curb idle speed and mixture, then proceed as follows:

(1) With the engine off and the transmission in the PARK or NEUTRAL position, open the throttle slightly.

(2) Close choke valve until fast idle screw tang can be positioned on the second highest-speed step of the fast idle cam (Fig. 27).

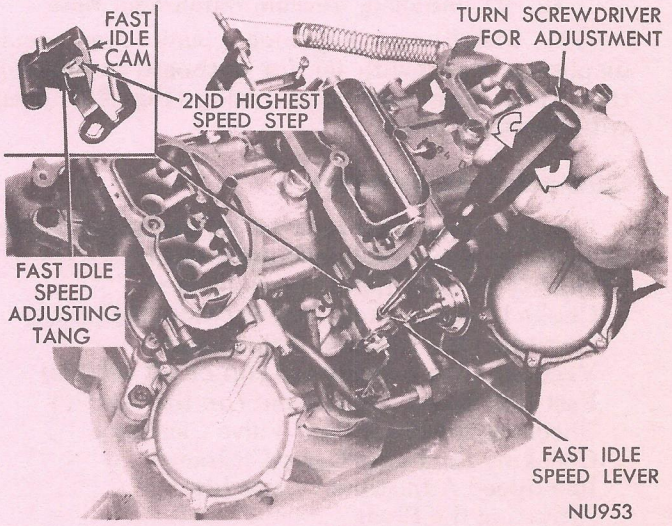

Fig. 27—Fast Idle Speed Adjustment (on vehicle)

(3) Start the engine and determine the stablized speed. Bend the fast idle tang by use of a screwdriver placed in the tang slot to secure the specified speed. **CAUTION: Bend only in a direction perpendicular to the contact surface of the cam. Movement in any other direction changes the CAM POSITION ADJUSTMENT described earlier.**

(4) Stopping the engine between adjustments is not necessary. However, reposition the fast idle tang on the cam after each speed adjustment to provide correct throttle closing torque.

Fast Idle Cam Position Adjustment

The fast idle engine speed adjustment should be made on the vehicle as described in the Fast Idle Speed Adjustment (on the vehicle) paragraph. However, the Fast Idle Cam Position Adjustment can be made on the bench. This adjustment is important to assure that the speeds of each step of the cam occur at the proper time during engine warm-up.

(1) Qualify the choke control lever, if necessary. (See Qualifying the Choke Control Lever Paragraph).

(2) With fast idle speed adjusting tang contacting second highest speed step on fast idle cam, move choke valve toward the closed position with light pressure on choke control lever (Fig. 28).

(3) Insert specified drill between the choke valve and wall of the air horn (See specifications).

An adjustment will be necessary if a slight drag is not obtained as the drill is being removed.

(4) To adjust, bend the indicated tang (Fig. 28) until the correct choke valve opening has been obtained.

Vacuum Kick Adjustment (ON or OFF Vehicle)

The choke diaphragm adjustments controls the fuel delivery while the engine is running. It positions the choke valve within the air horn by use of linkage between the choke shaft and the diaphragm. The diaphragm must be energized to measure the vacuum kick adjustment. Vacuum can be supplied by a distributor test machine, another vehicle or vehicle to be adjusted.

(1) If the adjustment is to be made with the engine running, position the fast idle tang (Fig. 29) (Cam position adjustment) to allow choke closure to kick position. If auxiliary vacuum source is to be used, open throttle valves, (engine not running) and move choke to closed position. Release throttle first, then release choke.

(2) When using an auxiliary vacuum source, disconnect the vacuum hose from the carburetor and connect it to the hose from the vacuum supply with a small length of tube to act as a fitting. Removal of the hose from the diaphragm may require forces which damage the system. Apply a vacuum of 10 or more.

(3) Insert the specified drill (see specifications) between the choke valve and the wall of the air horn (Fig. 29). Apply sufficient closing pressure on the lever to which the choke rod attaches to provide a minimum choke valve opening without distortion of the diaphragm link. Note that the cylindrical stem of the diaphragm will extend as an internal spring is compressed. This spring must be fully compressed for proper measurement of the vacuum kick adjustment.

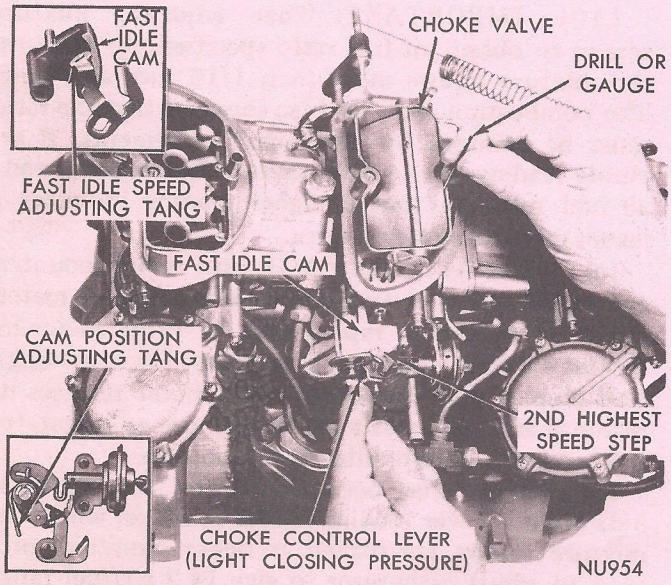

Fig. 28—Fast Idle Cam Position Adjustment

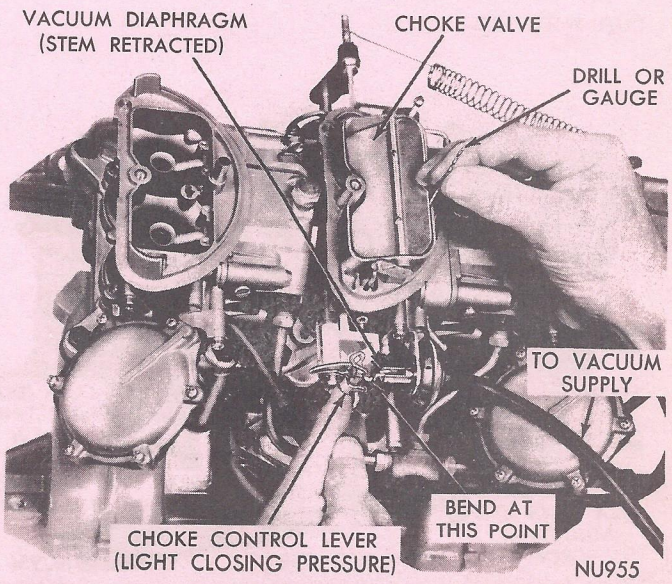

Fig. 29—Vacuum Kick Adjustment

(4) An adjustment will be necessary if a slight drag is not obtained as the drill is being removed. Shorten or lengthen the diaphragm link to obtain the correct choke opening. Length changes should be made by carefully opening or closing the bend provided in the diaphragm link. **CAUTION: DO NOT APPLY TWISTING OR BENDING FORCE TO DIAPHRAGM.**

(5) Reinstall the vacuum hose on the correct carburetor fitting.

(6) Make the following check. With no vacuum applied to the diaphragm, the **CHOKE VALVE SHOULD MOVE FREELY** between the open and closed positions. If movement is not free, examine the linkage for misalignment or interferences caused by the bending operation. Repeat the adjustment if necessary to provide proper link operation.

Outboard Carburetor Throttle Rod Adjustment

To synchronize the outboard throttle valves with the center, or control carburetor, proceed as follows:

(1) Remove air cleaner (if not previously done), then remove outboard throttle connector rod clips and disengage front and rear rods from throttle levers (Fig. 30).

(2) If this adjustment is to be done on vehicle, be sure ignition switch is **OFF**. (This de-energizes fast curb idle solenoid so that clearance is obtained between plunger and fast curb idle adjusting screw.)

(3) Close throttle valves on the two outboard carburetors and the center carburetor. Hold in closed position.

(4) Shorten or lengthen the front and rear connector rods by turning rod **in** or **out** in threaded sleeve, until rod end can enter hole in throttle lever evenly (Fig. 30).

(5) Install throttle connector rod in lever and secure with clip.

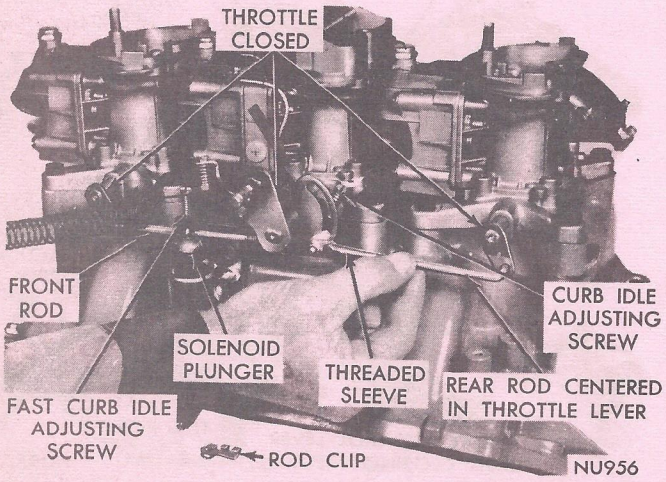

Fig. 30—Outboard Carburetor Throttle Rod Adjustment

(6) Re-adjust fast curb idle adjusting screw with engine running to obtain 900 rpm idle for vehicles equipped with automatic transmissions and 1000 rpm for manual transmissions.

Idle Speed Adjustment (Curb Idle)

To make the idle speed adjustment on carburetors, secure an accurate ignition tachometer and a Sun Electric Combustion-Vacuum Unit, Model 80, Exhaust Condenser, Model EC, and Hose 669-14 or equivalent. (The above analyzer is recommended; however, other reliable makes of analyzers in good condition may be used). Proceed as follows:

(1) Engine running at normal operating temperature, and timing checked (refer to Distributor Specifications).

(2) Air cleaner installed.

(3) Automatic Transmission in neutral position (Not in park position).

(4) On air conditioned vehicles, turn air conditioning off.

(5) Connect ignition tachometer.

(6) Insert probe of exhaust analyzer in tail pipe as far as possible (2 ft. minimum distance).

It is very important that probe and connecting tubing be free of leaks to prevent erroneous readings. If a garage exhaust system is used, to conduct exhaust gases away, a plenum chamber or other means must be used to reduce vacuum of exhaust system to 1/2 inch water or less.

(7) Connect exhaust gas analyzer, warm up and calibrate according to manufacturer's instructions.

(8) Disconnect hose between distributor vacuum control valve, (if so equipped) and intake manifold.

(9) Set idle speed to specified valve for specific engine-transmission combination.

(10) **IMPORTANT: When adjusting mixture screws to obtain air-fuel ratio specified, do not turn the mixture screws more than 1/16 turn at a time. The combustion analyzer is so sensitive that the ratio must be changed by very small increments, if accurate readings are to be obtained. The meters read in air-fuel ratio so that a higher reading indicates a leaner mixture and vice-versa.**

(a) Adjust each screw 1/16 turn richer (counterclockwise) and wait 10 seconds before reading meter.

(b) If necessary, repeat step "a" until meter indicates a definite increase in richness (lower reading). This step is very important since meter reverses its readings and indicates a richer mixture as carburetor is leaned out, if carburetor is set too lean.

(c) When it has been established that meter is indicating a lower reading (richer mixture) when idle mixture screws are turned in richer direction, proceed to adjust carburetor to give 14.2 air/fuel ratio; turning screws counterclockwise (richer) to lower

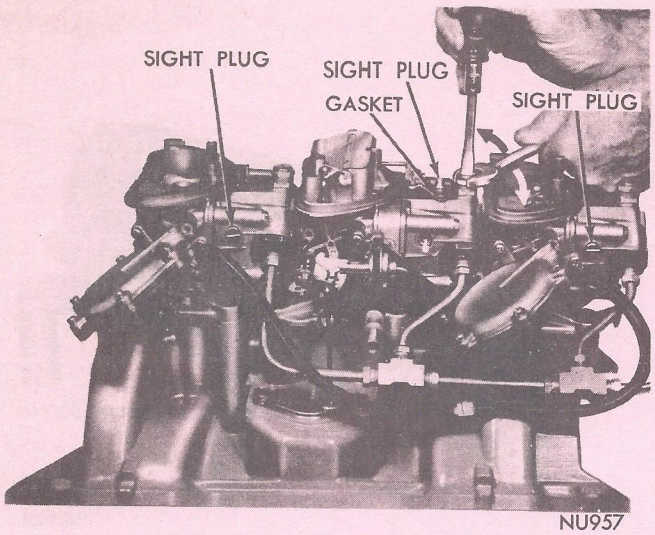

Fig. 31—Adjusting Fuel Level (On Vehicle)

meter reading and clockwise (leaner) to increase meter reading. **Do not remove plastic cap (if so equipped) in order to obtain an over-rich mixture.**

(d) If idle speed changes as idle screws are turned, adjust speed to specified valve and readjust mixture as required so that a 14.2 air/fuel ratio is obtained at specified idle speed.

Checking Wet Fuel Level (On Vehicle)

Before checking wet fuel level, check the fuel pump pressure to be certain 5 pound reading is obtained.

(1) To check fuel level in bowl, start engine and then remove sight plug from fuel bowl (Fig. 31).

(2) Using a wrench and screwdriver, turn adjusting nut either **up** or **down** until fuel just dribbles out of sight hole (Fig. 31).

(3) Reinstall sight plug and gasket and tighten securely. Check other fuel bowls in the same manner. **CAUTION: It is suggested that a suitable precaution be taken by placing a shop towel or a continer under the bowl, to catch any fuel that might be liberated due to a high or improper previous setting.**

DISASSEMBLING CARBURETOR (Outboard)

Front or Rear

The disassembly and assembly procedure covering the two outboard carburetors are similar to the center or control carburetor. In as much as the outboard carburetors are not equipped with automatic choke, power enrichment, accelerating pump, idle or spark advance, the servicing of these two carburetors are relatively simple.

The following disassembly and assembly procedures will be covered by pictures, step by step, with no text reference. Should written instructions be required, refer to disassembly and assembly procedures as written for the center unit.

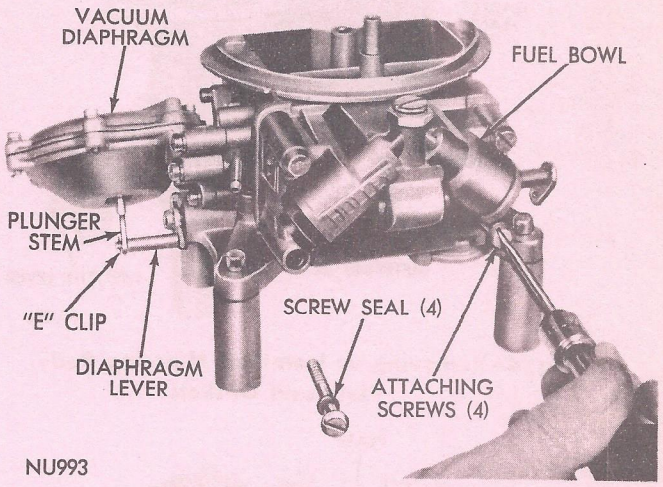

Fig. 1—Removing or Installing Fuel Bowl Screws

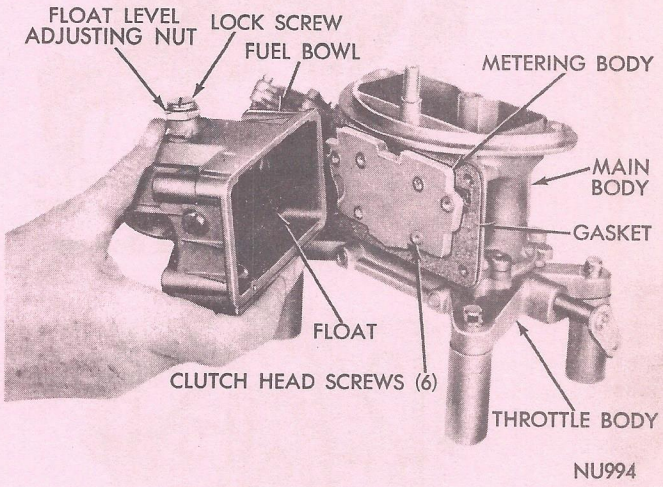

Fig. 2—Removing or Installing Fuel Bowl

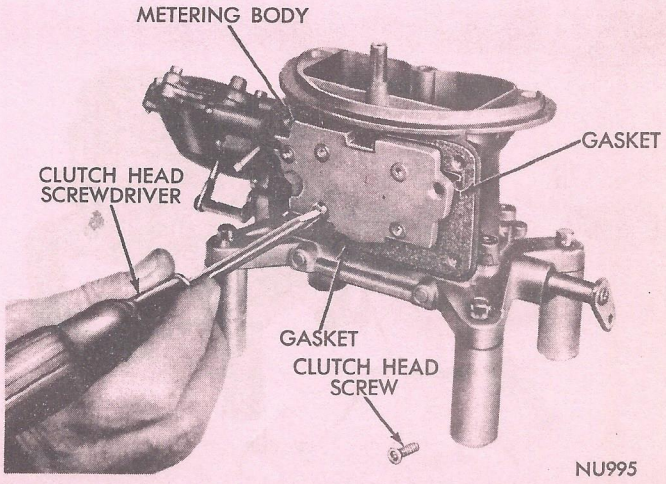

Fig. 3—Removing or Installing Metering Body Screws

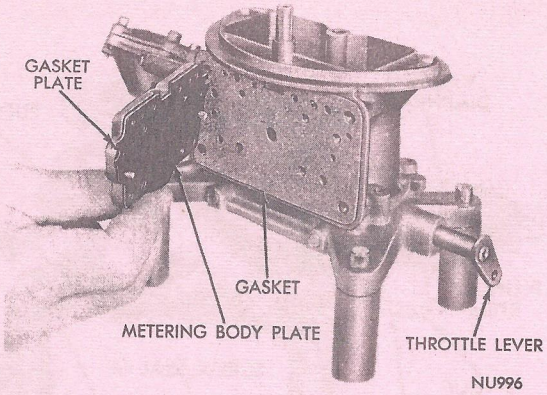

Fig. 4—Removing or Installing Metering Body, Plate and Gaskets

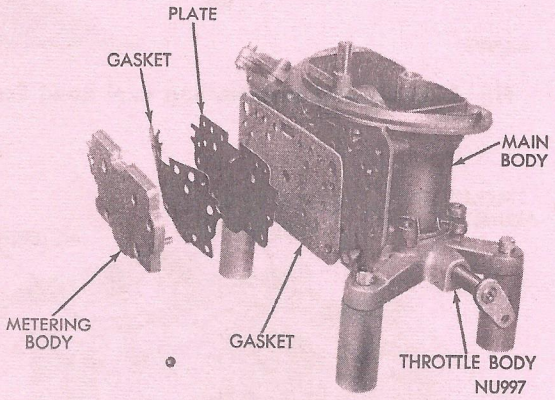

Fig. 5—Metering Body, Plate and Gaskets

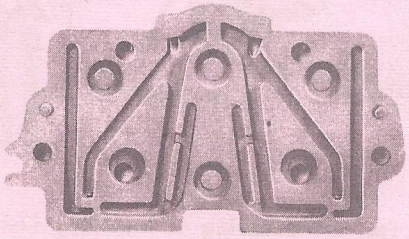

Fig. 6—Metering Body

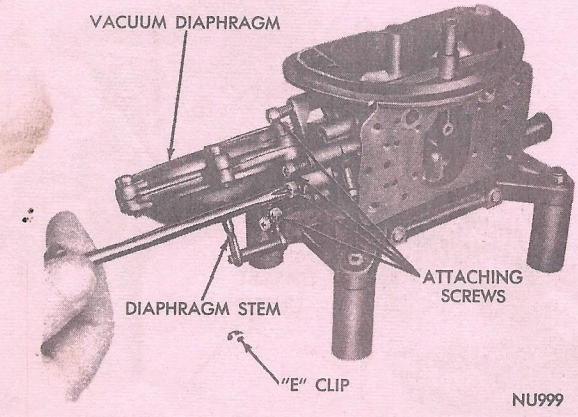

Fig. 7—Removing or Installing Diaphragm Mounting Screws

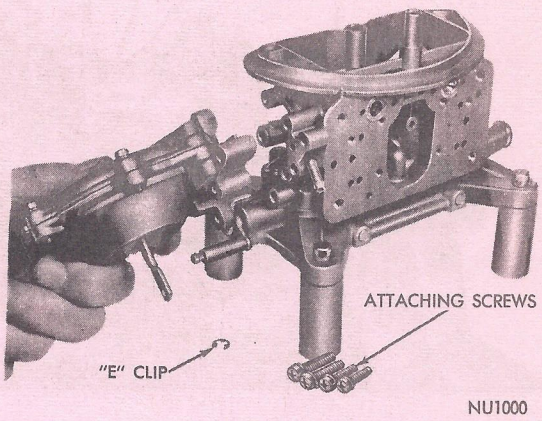

Fig. 8—Removing or Installing Vacuum Diaphragm

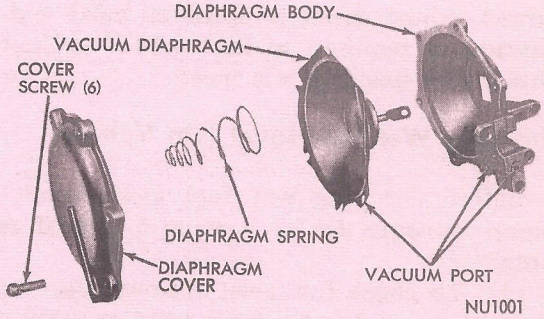

Fig. 9—Vacuum Diaphragm (Exploded View)

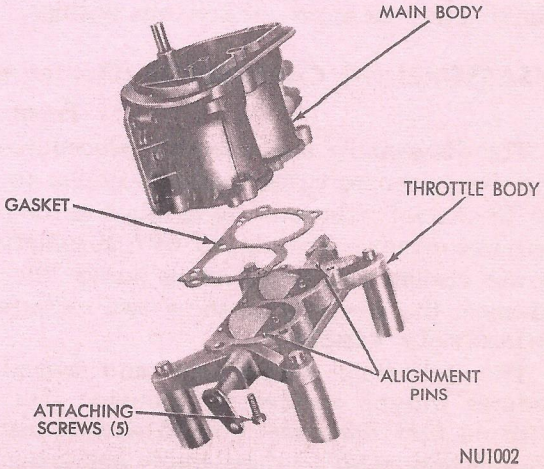

Fig. 10—Removing or Installing Main Body

HOLLEY 2300 and 2300-C Series 2-BARREL DOWNDRAFT CARBURETORS

	CENTER		OUTBOARD	
	Manual	Automatic	Front	Rear
Part No. Chrysler	4312052	4312053	4312050	4312051
Part No. Holley	R-4391A	R-4392A	R-4393A	R-4394A
Engine Displacement	440	440	440	440
Throttle Bore	1-1/2"	1-1/2"	1-3/4"	1-3/4"
Main Venturi	1-3/16"	1-3/16"	1-9/16"	1-9/16"
Main Metering Jet				
Standard	64	63		
1 Size Lean	62	61		
2 Size Lean (5,000-10,000 ft.)	60	59		
Adjustments				
Curb Idle Speed	1000	900		
Fast Idle Speed (No. Step)	2200	1800		
Bowl Vent Valve	.080/.125	.080/.125		
Unloader Adjustment (wide open throttle)	5/32	5/32		
Vacuum Kick Adjustment	#28 (.140")	#50 (.070")		
Fast Idle Cam Position	#53 (.059")	#53 (.059")		
Fuel Level (With Cover and float removed)	9/16"	9/16"	3/4"	3/4"
Float Setting (Dry)	With bowl sight plugs removed, fuel level should be at bottom edge of sight plug hole but not over-flowing. Note that floats are externally adjustable.			
Accelerator Pump				
Override Adjustment (wide open throttle)	.015"min.	.015"min.		
Choke				
Type	Well	Well	None	None
Control	Coil Spring	Coil Spring	None	None
Setting	2-Notches Rich	2-Notches Rich	None	None

SPECIAL TOOLS

T109-287	Elevating Legs
C-3886	Stand
C-3747	Power Valve Remover-Installer
C-3748	Main Metering Jet Remover-Installer
CL-13	Clutch Head Screwdriver

CPD PRODUCT BULLETIN

CHRYSLER PARTS DIVISION

TO ALL CHRYSLER MOTORS CORPORATION DEALERS

Date: 8-5-69

Subject: Special 440
C.I.D. Eng.
w/3 2 Bbl.

Reference, 1969 Road Runner and Dodge Super Bee Models with special 440 C.I.D. Eng. advertized as (440 6 Bbl.) Road Runner and (Six Pack) Dodge.

The following Parts List applies to all Parts Peculiar to these Vehicles only. All other Parts may be located in respective Groups and Model columns, in the latest 1969 Parts Catalog.

Part Type Code	Description	Part No.	Qty.
9-07-5	CRANKSHAFT	3512 036	1
9-15-1	CAMSHAFT	3462 038	1
9-31-4	ROD, Connecting	3462 426	1
9-23-17	GASKET, Chain Case Cover	2264 794	1
9-36-5	PISTON PIN	2780 524	8
9-35-1	RING SET	3420 228	1
9-39-5	VALVE, Intake	3418 475	8
9-39-6	VALVE, Exhaust	3418 479	8
9-39-15	SPRING, Valve	2899 549	16
9-39-17	LOCK, Intake Valve Spring Retainer	2402 312	16
9-41-1	SILENCER PACKAGE	3420 039	1
9-43-1	VALVE ROCKET, Rt.	3004 718	8
9-43-1	VALVE ROCKER, Lt.	3004 719	8
9-48-7	MANIFOLD, Intake	3412 046	1

Also listed in this Bulletin are additional Chassis items.

AIR CLEANER

14-29-2	AIR CLEANER	3412 058	1
14-29-5	GASKET	3462 205	1
14-29-33	STUD	1826 286	AR
19-58-14	HOSE, Air Cleaner Drain	2825 417	AR
10-1-62	HOSE, Crankcase Vent Inlet A/Cleaner	2951 378	AR

PARTS DIVISION CHRYSLER MOTORS CORPORATION

CARBURETORS

14-30-1	CARBURETORS, Frt., w/Man. and Auto. Trans.	3412 050	1
14-30-1	CARBURETORS, Rr., w/Man. and Auto. Trans.	3412 051	1
14-30-1	CARBURETORS, Ctr., w/Man. Trans. only	3412 052	1
14-30-1	CARBURETORS, w/Auto. Trans. only	3412 053	1
14-30-2	GASKET, Carburetor Flange	2946 531	1
	BOLT, Carburetor to Intake Manifold	181 089	AR

AUTOMATIC CHOKE

14-39-45	CHOKE	2946 532	1

FUEL PUMP, FUEL LINES VAPOR SEPARATOR

	HOSE, Signal Vacuum	2448 621	1
	CONNECTOR, Fuel Pump	137 406	AR
14-73-1	FUEL PUMP	3004 107	1
	FUEL PUMP SEPARATOR	2951 192	AR
	CLAMP	274 461	AR
	HOSE, Fuel Separator	2600 702	AR
	CLAMP	272 776	AR
14-90-1	CLIP, Fuel Return Tube "S"type	2530 700	AR
	CLAMP	272 776	AR

OIL PUMP PACKAGE

10-7-6	PUMP	2808 510	1

THROTTLE LINKAGE

14-6-1	SPRING, Trans. Rod Return	2951 450	AR
14-6-1	SPRING, Accel. Pedal Return	3462 704	AR
14-11-40	STUD, Carburetor Lever	2951 485	AR
14-25-11	CABLE, Throttle Control	3418 846	1
14-11-9	ROD, Carb. to Cable Mtg. Brkt. Lever	2951 493	1
	CLIP, Carburetor Rod, Frt.	6008 145	AR
14-11-9	ROD, Carburetor, Rr.	2951 487	1
	CLIP	6008 144	AR
14-11-9	ROD, Lever to Trans. B/Crank.	2951 495	1
14-11-9	ROD, Carburetor, Frt.	2951 486	1

REAR AXLE BRAKE TUBE

5-58-1	TEE	1940 622	1
5-62-1	HOSE	2208 496	1

SPECIAL ELECTRICAL ITEM

8-27-97	SOLENOID, 12 Volt	3412 059	1
8-27-99	WIRE, Carburetor Shut-off Solenoid	3412 459	1

UNIVERSAL JOINT & PROPELLER SHAFT

16-2-1	JOINT and PROPELLER SHAFT (Road Runner)	2996 560	1
16-2-1	JOINT and PROPELLER SHAFT (Super Bee)	2996 581	1
21-85-5	TRANSMISSION, Speedo Drive Pinion	2538 940	1

POWER STEERING PUMP OIL COOLER

19-54-196	PUMP, Power Strg. Oil Cooler	2891 162	1
19-58-14	HOSE	2537 699	AR
	CLAMP	6026 873	AR

REAR SUSPENSION BUMPERS

17-19-3	SUPPORT, Rear Suspension Pinion Bumper	3400 570	AR
17-19-3	BUMPER, Rear Suspension, Rr. Axle	2834 934	AR

HOOD

15-3-3	HOOD and AIR SCOOP	3412 056	1
15-11-88	BRACKET, Hood Retaining	3412 415	AR
15-11-89	STUD PIN, Hood Hold-Down Lock	3412 411	AR

PARTS INFORMATION BULLETIN

IMPORTANT

CHANGE PARTS CATALOGUES AND ALL RECORDS TO AGREE WITH THIS BULLETIN. MAKE SURE ALL ORDERS ARE PLACED IN ACCORDANCE WITH THE LATEST INFORMATION.

ALL DEALERS – PARTS MANAGERS

DATE
Nov. 16, 1970

6 PAK CARBURETORS FOR 1969 CARS WITH 6 PAK & 440 CU. IN. ENGINE

The attached lists include 6 Pak Carburetors released for use with 1969 vehicles with 440 Engine.

F. Phillips
Supv. Parts Cataloguing

/ap

P.I.B. No.
555

PARTS DIVISION CHRYSLER CANADA LTD.

5211-12-68

1969 6 PAK CARBURETORS - 440 ENG.

PART TYPE CODE	DESCRIPTION	QTY	3412 050 R4393A	3412 051 R4394A	3412 052 R4391A	3412 053 R4392A
14-30-2	Gasket, Flange			3549 361		
14-30-4	Kit, Minor Repair	1	3514 651	3514 651	3514 671	3514 671
14-30-7	Kit, Gasket	1	3514 652	3514 652	3514 672	3514 672
14-30-8	Valve & Seat, Fuel	1	3514 669	3514 669	3514 669	3514 669
14-30-14	Nut, Valve Seat Adj.	1	3420 319	3420 319	3420 319	3420 319
14-30-30	Fitting, Fuel Inlet	1	2809 248	3514 820	3514 820	3514 820
	Connector, Tee	1			3514 663	3514 663
14-33-1	Body & Shaft, Throttle	1	3514 792	3514 792	3514 836	3514 839
14-34-15	Gasket, Power Valve	1			3420 351	3420 351
14-34-17	Gasket, Diaph. Hsg.	1	3420 350	3420 350		
14-34-21	"O" Ring, Fuel Valve Seat	1	3420 299	3420 299	3420 299	3420 299
14-35-1	Jet, Main - Std.	2			2196 240	2809 377
14-35-3	Nozzle, Pump Disch.	1			3420 295	3420 295
14-35-9	Diaphragm Assy. Secondary	1	3514 857	3514 857		
14-35-19	Screw, Pump Disch. Nozzle	1			3420 346	3420 346
14-35-26	Lever, Diaph.	1	3514 655	3514 655		
14-35-39	Body & Plugs, Metering	1	3514 793	3514 795	3514 838	3514 838
14-35-45	Cover, Diaph.	1	3514 653	3514 653		
14-35-43	Screw, Fuel Pump Cover	4			3420 349	3420 349
	Screw, Meter Body	6	3420 349	3420 349		
14-36-1	Spring, Pump Oper. Adj. Screw	1			3420 378	3420 378
14-36-29	Spring, Throttle Stop Sc.	1			3419 675	3419 675
14-36-50	Spring, Air Vent Valve	1			3420 377	3420 377
14-36-53	Spring, Diaph. Ret.	1	3514 806	3514 806	3420 376	3420 376
14-37-7	Plug, Tee Connector	2			3512 866	3512 866
14-37-14	Plug, Fuel Level Check	2	3420 275	3420 275	3420 275	3420 275
14-37-15	Plug, Idle Needle Limiter	2	3481 697	3481 697		
14-38-3	Screw, Throttle Body	6	3420 342	3420 342	3420 342	3420 342
14-38-4	Plate, Throttle	2	3514 791	3514 791	3514 835	3514 665
14-38-5	Screw, Throttle Plate	4	3420 261	3420 261	3420 347	3420 347
14-38-27	Bushing, Throttle Conn. Pin	1			3514 678	3514 678
14-38-28	Bar, Throttle Conn.	2			3514 690	3514 690
14-38-32	Pin, Throttle Conn.	1			3514 685	3514 685
14-39-1	Plate, Choke	1			3514 658	3514 658
14-39-7	Diaphragm Assy. Choke	1	3514 654	3514 654	3419 515	3419 515
14-39-9	Screw & Washer, Brkt.	2			3420 339	3420 339
	Screw, Diaph. Mtg.	2	3481 700	3481 700		
14-39-10	Lever, Choke Control	1			3514 659	3514 659
14-39-11	Link, Choke Diaph.	1		3481 662	3420 369	3420 369
14-39-28	Rod, Choke	1			3514 677	3514 677
14-39-29	Seal, Choke Rod	1			3420 301	3420 301
14-39-30	Shaft Assy, Choke	1			3420 311	3420 311
14-39-45	Choke	1			2946 532	2946 532
14-39-51	Hose, Choke Vacuum	1			3419 687	3419 687
14-39-56	Pin, Choke Clevis	1			3420 368	3420 368
14-40-1	Float & Hinge, Carb.	1	3481 693	3481 693	3514 668	3514 668
14-40-5	Retainer, Float	1	3549 331	3549 331	3549 331	3549 331
14-40-6	Shaft, Float	1	3481 683	3481 683	3481 683	3481 683
14-40-18	Spring, Float	1	3481 698	3481 698	3481 698	3481 698

1969 6 PAK CARBURETORS - (CONT'D.)

PART TYPE CODE	DESCRIPTION	QTY	3412 050 R4393A	3412 051 R4394A	3412 052 R4391A	3412 053 R4392A
14-41-3	Diaphragm Assy.	1			2196 234	2196 234
14-41-10	Cam, Pump	1			3420 321	3420 321
14-41-22	Lever, Pump Oper.	1			3514 680	3514 680
14-41-23	Retainer, Pump Oper. Lever	1			3514 681	3514 681
14-41-34	Cover Assy, Fuel Pump	1			3514 673	3514 673
14-41-35	Screw, Diaph. Cover	6	3420 259	3420 259		
14-45-1	Needle, Idle Adj.	2	3420 363	3420 363	3420 362	3420 362
14-45-2	Seal, Idle Needle	2	2084 719	2084 719	2084 719	2084 719
14-45-3	Lever, Fast Idle Cam	1			3420 338	3420 338
14-45-4	Cam, Fast Idle	1			3514 689	3514 689
14-45-8	Screw & Wa. Fast Idle Cam	1			3420 344	3420 344
	Screw, Diaph. Lever	1	3420 344	3420 344		
14-45-14	Limiter, Idle Needle	2			3420 393	3420 393
14-45-20	Screw, Idle Adj.	1			3514 683	3514 683
14-46-3	Plate, Meter Body	1	3420 370	3420 370		
14-46-4	Retainer, (E-Ring)	1	3481 337	3481 337	3420 375	3420 375
14-46-5	Rod, Air Vent	1			3514 691	3514 691
14-46-6	Clamp, Air Vent Rod	1			3420 387	3420 387
14-46-7	Plate, Baffle	1			3420 388	3420 388
14-46-12	Clip, Screw Lock	1			3514 688	3514 688
14-49-1	Bowl & Plugs Assy, Fuel	1	3481 695	3481 695	3514 837	3514 837
14-54-3	Screw, Pump Oper. Adj.	1			3420 345	3420 345
	Screw, Throttle Stop	1			3420 256	3420 256
14-54-4	Screw, Fuel Valve Seat Lock	1	3420 273	3420 273	3420 273	3420 273
14-54-11	Nut, Throttle Conn. Pin	1			3514 687	3514 687
14-54-13	Spacer, Throttle Conn. Pin	2			3514 692	3514 692
14-54-15	Screw, Choke Plate	2			3420 255	3420 255
14-54-29	Screw, Float Shaft Brkt.	2	3481 699	3481 699	3481 699	3481 699
14-54-36	Screw, Air Rod Vent Clamp	1			3514 682	3514 682
14-54-78	Screw, Fuel Bowl to Main Body	4	3420 348	3420 348	3420 341	3420 341
	Screw, Diaph. Mtg.	2	3419 653	3419 653		

SERVICE BULLETIN

Plymouth
Fargo Trucks
CHRYSLER

Dodge
Dodge Trucks
CHRYSLER

DATE 5-29-70 NO. 1860

SUBJECT: ELECTRICAL
SUJET: SOLENOID DISTRIBUTOR

MODELS: 1970 PASSENGER CARS EQUIPPED WITH 440 CID
MODÈLES: ENGINE AND 3-2-BBL. (6-PACK) CARBURETORS

Effective 2-9-70 on 440 3-2-bbl. engines with manual transmission and 3-5-70 on engines with automatic transmission, solenoid vacuum control distributors were incorporated into production.

The change necessitated a new idle throttle stop solenoid. Part Number 2875975 was superseded by 3438338.

The specifications of the two new distributors on engines built after these dates are printed on Page 2 of this bulletin.

Parts Availability

Parts listed in this bulletin will be available from the Parts Division on or about June 30, 1970.

W. F. Chisholm
Service Manager

(THIS BULLETIN IS SUPPLIED AS TECHNICAL INFORMATION ONLY AND IS NOT AN AUTHORIZATION FOR REPAIRS)
(CE BULLETIN VOUS EST FOURNI À TITRE DE RENSEIGNEMENT TECHNIQUE SEULEMENT; IL N'AUTORISE AUCUNE RÉPARATION)

CHRYSLER CANADA LTD.

IGNITION SYSTEM

WITH CLEANER AIR SYSTEM

Engine Application	440 6-bbl. Carburetor Manual Transmission	440 6-bbl. Carburetor Automatic Transmission
Engine Displacement	440 Cu. In.	440 Cu. In.
Distributor Part No. (Chrysler Built)	3438355	3438356
(Prestolite Built)	4019	4019A
Advance-Centrifugal (Distributor Degrees at Distributor RPM)	0° to 3° @ 600 RPM 4° to 6° @ 850 RPM 8.7° to 9° @ 2300 RPM	0° to 2° @ 630 RPM 4° to 6° @ 750 RPM 8.7° to 9° @ 2300 RPM
Advance-Vacuum (Distributor Degrees at Inches Mercury)	0° to 2° @ 9" 8° to 9° @ 13.8"	0° to 2° @ 9" 8° to 9° @ 13.8"
Contact Gap	.014" to .019"	.014" to .019"
Dwell Angle . . . . . One set points:	27° to 32°	27° to 32°
Both set points:	37° to 42°	37° to 42°
Contact Arm Spring Tension	17 to 21.5 oz.	17 to 21.5 oz.
Condenser Capacity	.25 to .285 mfd.	.25 to .285 mfd.
Shaft Side Play (New or Rebuilt)	.000" to .003"*	.000" to .003"*
Shaft End Play (After Assembly)	.003" to .017"	.003" to .017"
Rotation	Counterclockwise	Counterclockwise
Timing	5° BTC**	5° BTC**
Spark Plug Type	J11Y Champion-or P-3-4P MoPar***	J11Y Champion-or P-3-4P MoPar***
Size	14MM-3/8" Reach	14MM-3/8" Reach
Gap	.035"	.035"
Firing Order	1-8-4-3-6-5-7-2	1-8-4-3-6-5-7-2
Coil	Chrysler-Essex -OR-	Chrysler-Prestolite
Identification Number	2495531	2495531
Primary Resistance @ 70°-80°F.	1.41 to 1.55 Ohms	1.65 to 1.70 Ohms
Secondary Resistance @ 70°-80°F.	9200 to 10700 Ohms	9400 to 11700 Ohms
Ballast Resistor	2275590	
Resistor @ 70°-80°F.	0.5 to 0.6 Ohms	
Current Draw (Coil and ballast resistor in circuit) Engine Stopped	3.0 Amperes	
Engine Idling	1.9 Amperes	

* Service wear tolerance should not exceed .006 inch.

** Plus or minus 2-1/2°. Set at curb idle; see "Idle Speed Adjustment, Fuel System".

*** If J11Y Champion or P-3-4P MoPar are not available, use Champion J10Y.

CHRYSLER CANADA LTD.

SERVICE • BULLETIN

DATE 10-23-70

BULLETIN NUMBER 1929

Of Interest ☐ General Manager ☐ Sales Manager ☐ Service Manager ☐ Parts Manager ☐ Service Technician

SUBJECT: FUEL
SUJET: FUEL USAGE RECOMMENDATION

MODELS: ALL PASSENGER CARS AND TRUCKS
MODELES: TRUCKS

All 1971 and prior model passenger car "regular" fuel engines will operate satisfactorily, in normal usage, on 91 octane "low lead" or "low pollutant", gasolines containing at least 0.5 gram of lead or .07 gram of phosphorus per gallon, or equivalent additive.

These fuels are not suitable for use in the following passenger car engines which were designed specifically to operate on premium fuels:

Model Year	Engine Description
1971	340 C.I.D.
1971	426 C.I.D. Hemi
1971	440 C.I.D. H.P. 4-bbl. 9.7:1 Compression Ratio
1971	440 C.I.D. 3-2-bbl.
1970 and Prior	All Engines with 4-bbl. Carburetor or Multiple Carburetor installations.

(THIS BULLETIN IS SUPPLIED AS TECHNICAL INFORMATION ONLY AND IS NOT AN AUTHORIZATION FOR REPAIRS)
(CE BULLETIN VOUS EST FOURNI À TITRE DE RENSEIGNEMENT TECHNIQUE SEULEMENT; IL N'AUTORISE AUCUNE RÉPARATION)

Chrysler cautions against continuous use of completely lead-free or clear gasolines which do not contain suitable lubricating additives such as lead or phophorus. Continuous use of such fuels in normal driving could cause valve seat burning, resulting in excessive emissions, poor performance and possible engine failure.

Some engines may require a retarded timing of up to 5 degrees from specifications to operate satsifactorily on low-lead or low-pollutant fuels. If an engine continues to have spark knock at any speed after timing is retarded 5 degrees from specifications, a higher octane fuel must be used.

W. F. Chisholm

W. F. CHISHOLM
SERVICE MANAGER